RoHS Compliant

DIN 41612 EUROCARD CONNECTORS

Vertical Female Type F48 Connectors

Technial data

EURO DIN 41612	Power
Housing	PBT & 30%Class Fiber(UL94V-0)
Contact	Female : Phosphor Bronze
Plating:	2U"Au plated on contact area, Tin-plated on tail
Operating temperature	-55°C~+115°C
Contact resistance	20m(ohm)max.
Insulator resistance	10^6 M(ohm)min.
Current rating	6 AMP
Withstanding voltage	AC 1000V for 1 minute
Insertion force	75N max.
Withdrawal force	0.15 N min.per individual contact
Contact Rating:	Class 3
RoHS Compliant	

Dimensions

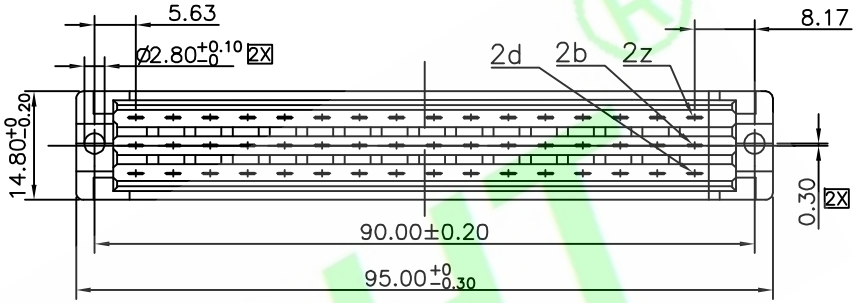

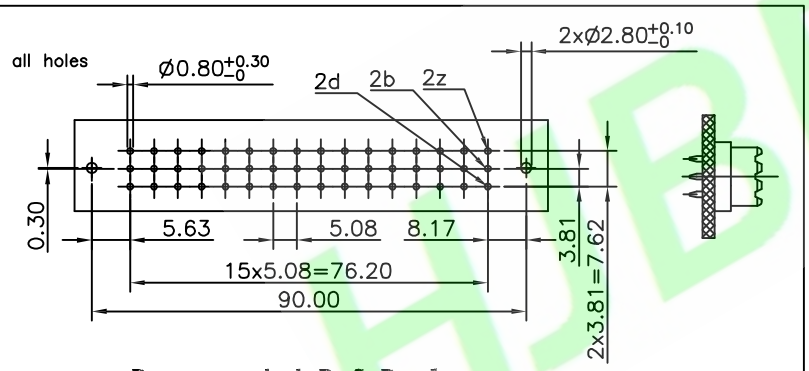

Recommended P.C.B. layout

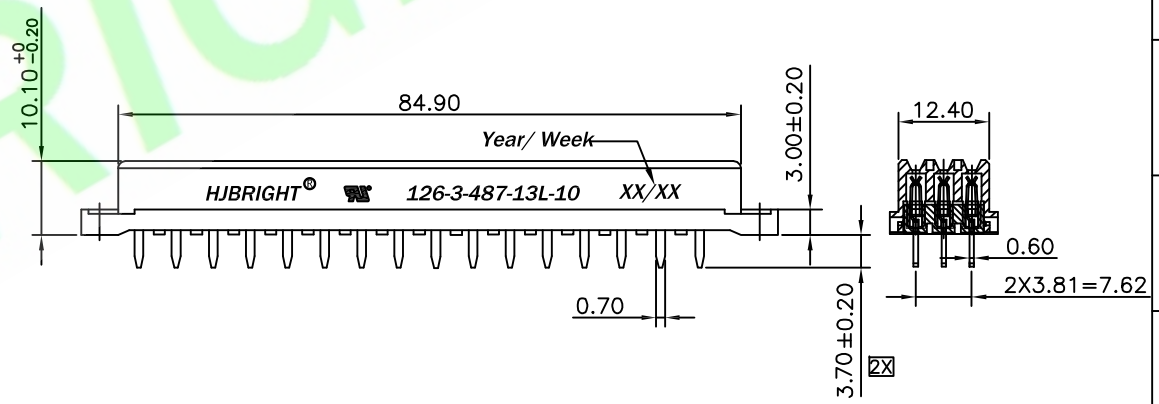

REV.	DESCRIPTION	DR.BY	ECN. NO.
5X			
4X			
3X			
2X	尺寸变更	Samson	ECN20131001
1X	ORIGINAL	joan cheng	

DR.BY.: Samson
CHKD.: Tony
APPD.: Billy

GENERAL TOLERANCE:

LINEAR		ANGLES	
X.:	±0.30	X°:	±3.0°
X.X:	±0.25	X.X°:	±2.0°
X.XX:	±0.15	X.XX°:	±1.0°
X.XXX:	±0.05	X.XXX°:	

PART NO : 126-3-487-13L-10
DWG. NO.: RD0612-041
TITLE :
DATE: 18-Dec-2008

HJBRIGHT® 東莞市華晶電子有限公司
BRIGHT-E ELECTRONIC TECHNOLOGY LIMITED

SHEET: 1/1
SCALE: 1:1
UNIT: mm
THIRD ANGLE PROJECTION
A4