RoHS Compliant

Automobile Product

Specifications:
Material And Finish:
Insulator:Nylon 9T UL94V-0 Color:Black
Contact:Phosphor copper
Plated:See Ordering Information

Rating:
Current Rating:2.0 Amp
Operating Temperature
Range:-40°~+105°C

Electrical:
Contact resistance:20m Ohm Max
Insulator resistance:1000M ohm min.
Withstanding Voltage:500V AC/Minute

Ordering Information

22011R-04S234-1X
1 2 3 4 5

1: —— Series No.
2: —— R:R/A Type
3: —— No. of Positions
4: —— S:Matte Tin Plated
5: —— A:In Bag
B:In Tube
C:In Tray
G:Tape&Reel

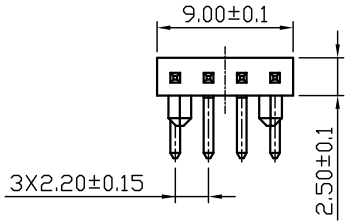

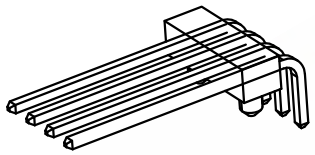

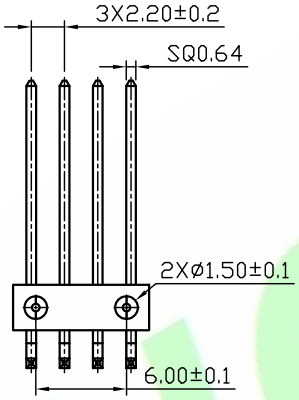

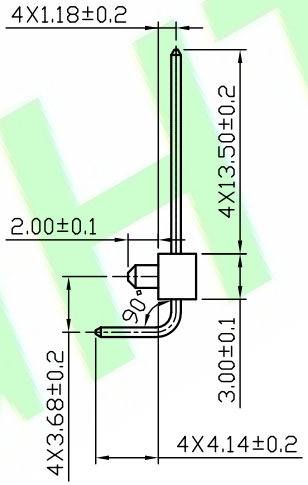

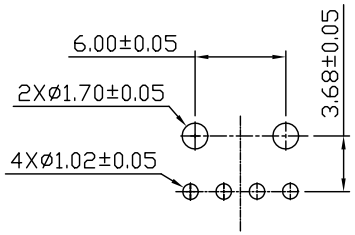

Recommended PCB LAYOUT (TOP VIEW)

Tolerance:±0.05mm

REV.	DESCRIPTION	DR.BY	ECN. NO.
5X			
4X			
3X			
2X			
1X	ORIGINAL	Zolin	

DR.BY.: Zolin
CHKD.: Hu.CH
APPD.: Billy

GENERAL TOLERANCE:			
LINEAR		ANGLES	
X.:		X°:	±5.0°
X.X:	±0.40	X.X°:	±3.0°
X.XX:	±0.25	X.XX°:	±2.0°
X.XXX:	±0.15	X.XXX°:	±1.0°

PART NO : 22011R-04S234-1X
DWG. NO.:
TITLE : 4PIN Single Row 2.2 Pitch R/A Header
DATE: 15-Sep-2025

HJBRIGHT® 東莞市華晶電子有限公司
BRIGHT-E ELECTRONIC TECHNOLOGY LIMITED

SHEET: 1/1
SCALE: 1:1
UNIT: mm
THIRD ANGLE PROJECTION
A4

HJBRIGHT®