RoHS Compliant

Specifications:
Material And Finish:
Insulator:High−Temperature Thermoplastic
Contact:Copper Alloy
Plated:See Ordering Information

Rating:
Current Rating: Signal Pin:5A
Power Pin:40A Max
Voltage Rating:250V AC/DC
Operating Temperature Range:−40°~+125°C

Electrical:
Contact resistance: Signal Pin:20 Ohm Max
Power Pin:3 Ohm Max
Insulator resistance:100M ohm Min.
Withstanding Voltage:1000V AC OR 1600V DC

Ordering Information
A25020R−10X−01−C
1 2 3 4 5

1: —— Series No.
2: —— R:R/A Type
3: —— No. of Positions
4: —— Q:Tin Plated
S:Matte Tin Plated
6: —— C:In Tray

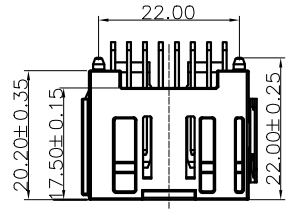

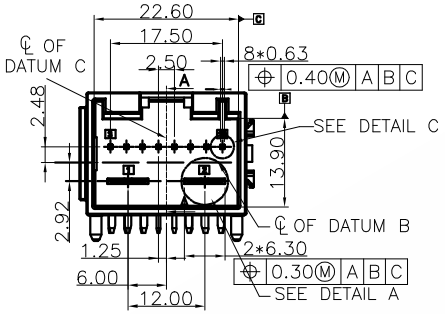

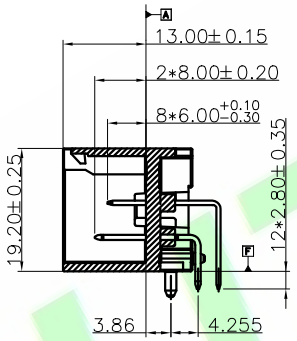

SECTION A−A

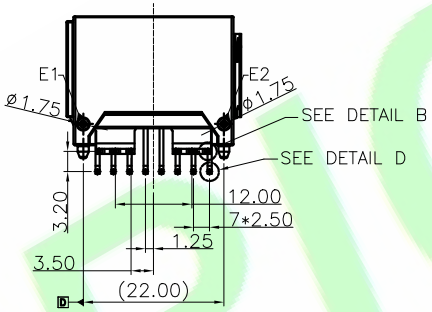

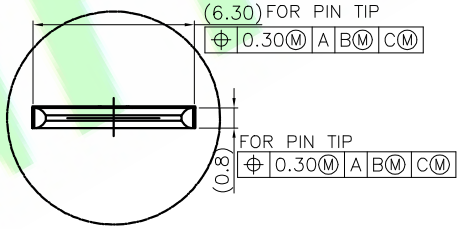

DETAIL A
SCALE 4:1

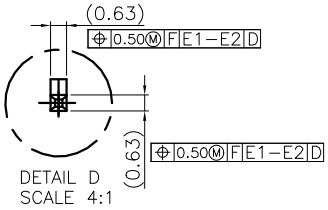

DETAIL D
SCALE 4:1

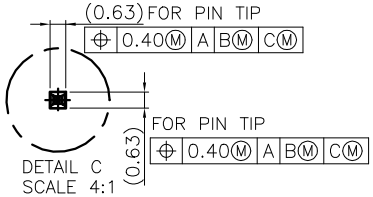

DETAIL C
SCALE 4:1

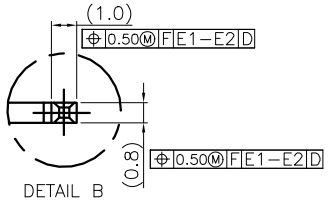

DETAIL B
SCALE 4:1

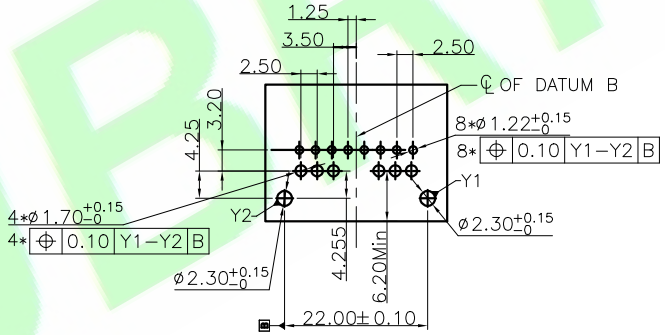

Recommended PCB Layout
(Tolrance: ±0.05)
Thickness 2.45±0.14mm

1X	ORIGINAL	JoinZm	
REV.	DESCRIPTION	DR.BY	ECN. NO.

DR.BY.: JoinZm	GENERAL TOLERANCE: LINEAR	ANGLES
CHKD.: Juddyan	X.: ±0.30	X°: ±5.0°
	X.X: ±0.20	X.X°: ±3.0°
APPD.: Billy	X.XX: ±0.15	X.XX°: ±2.0°
	X.XXX: ±0.10	X.XXX°: ±1.0°

PART NO : A25020R−10X−01−C
DWG. NO.:
TITLE : 2.50mm Pitch Wafer R/A Type
DATE: 27−Nov−2024

HJBRIGHT® 東莞市華晶電子有限公司
BRIGHT−E ELECTRONIC TECHNOLOGY LIMITED

SHEET: 1/1
SCALE: 1:1
UNIT: mm
THIRD ANGLE PROJECTION
A4