RoHS Compliant

Specifications:
Material And Finish:
Contacts:Brass
Insulator: LCP Or High Temperature Piastic
UL 94V-0 Rated.
Shell:Cold Roller Steel.
Finishes:
Contact:Gold Flash.
Shell:Nickel Plated.

Contact Insertion Force:341 g.Maximum.
Contact Separation Force:21 g.Minimum

Rating:
Current Rating:3 Amps
Operating Temperature Range:-55°~+105°C

Electrical:
Contact resistance:25 Milliohms MAX
Insulator resistance:5000M ohm min.
Withstanding Voltage:1000V AC/Minute

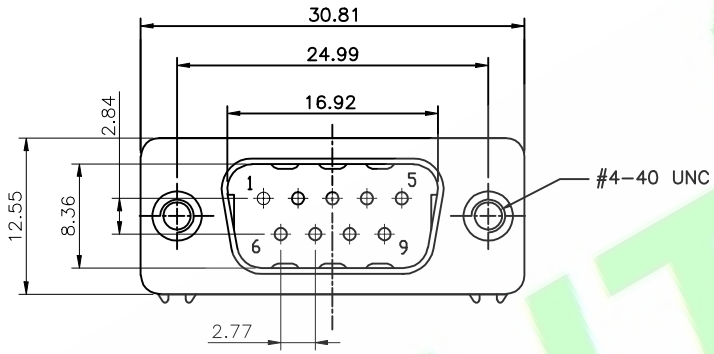

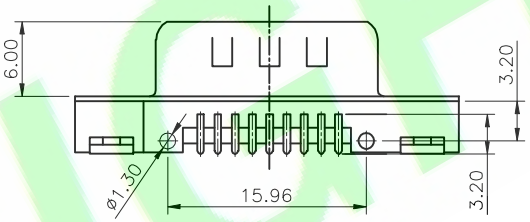

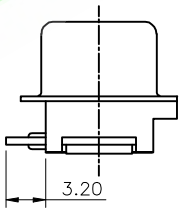

Ordering Information
DB104R2-09MX-01-X
1 2 3 4 5 6

1: —— Series No.
2: —— R:R/A Type
3: —— No. of Positions
4: —— M:Male
5: —— A:Gold Flash
H:Gold flash on contact;
Tin on tial
6: —— B :In Tube
C :In Tray

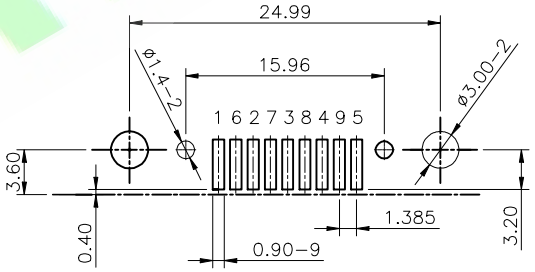

PCB Layout

1X	ORIGINAL	JoinZm	
REV.	DESCRIPTION	DR.BY	ECN. NO.

DR.BY.: JoinZm
CHKD.: Judyyan
APPD.: Billy

GENERAL TOLERANCE:			
LINEAR		ANGLES	
X.:	±0.38	X°:	±2.0°
X.X:	±0.35	X.X°:	±1.0°
X.XX:	±0.25	X.XX°:	±0.5°
X.XXX:	±0.15	X.XXX°:	

PART NO : DB104R2-09MX-01-X
DWG. NO.:
TITLE : SLIM-9 Male Connector, Riveted And Suitable For SMT
DATE: 30-Dec-2020

HJBRIGHT® 東莞市華晶電子有限公司
BRIGHT-E ELECTRONIC TECHNOLOGY LIMITED

SHEET: 1/1
SCALE: 1:1
UNIT: mm
THIRD ANGLE PROJECTION
A4

HJBRIGHT®