RoHS Compliant

Specifications:
Material:
Housing(VGA): PBT, UL 94V-0, Color: Blue.
Housing(HDMI): LCP,UL 94V-0, Color: Black.
Connecting Pedestal: PA9T,UL 94V-0, Color: Black
Terminal: Copper Alloy.
Shel(VGA): SPCC.
Shell(HDMI): Copper Alloy
Boardlock: Copper Alloy,
Bracket: Zinc Alloy.
Gasket: Stainless Steel
Screw: Copper Alloy
Plated:See Ordering Information

Finish:
Terminal(VGA):Gold Plated Over Nickel at Contact Area
Tin Plated Over Nickel at Solder Area.
Terminal(HDMI):Full Gold Plated Over Nickel Area.
Shell:Nickel Plated
Boardlock:Tin Plated.
Bracket:Nickel Plated
Screw:Nickel Plated.
This Product is LEAD-FREE & RoHS
Compliance Product.

Rating & Electrical:
VGA:
Voltage Rating:250V AC(RMS) Max
Current Rating:3.0 Ampere per Contact
Contact resistance:25m Ohm Max
Insulator resistance:5000M ohm min.
Withstanding Voltage:1000V DC(RMS)
Total Mating Force:6.0Kgf Max
Total Unmating Force:1.2Kgf Min
Operating Temperature Range:-55°~+85°C
HDMI:
Voltage Rating:40V AC(RMS) Max
Current Rating:0.5 Ampere per Contact
Contact resistance:30m Ohm Max
Insulator resistance:100M ohm min.
Withstanding Voltage:500V DC(RMS)
Total Mating Force:4.5Kgf Max
Total Unmating Force:1.0Kgf Min
Operating Temperature Range:-55°~+85°C

Ordering Information
DBHDMIR-15FX19MX-X
1 2 3 4 5 6 7

1:—— Series No.
2:—— R:R/A Type
3:—— 15F:15pin Femeal
4:—— VGA:
H:Gold flash on contact;Matte Tin on tail
5:—— 19M:19pin Male
6:—— HDMI:
H:Gold flash on contact;Matte Tin on taill
7:—— A:In Bag
B:In Tube
C:In Tray

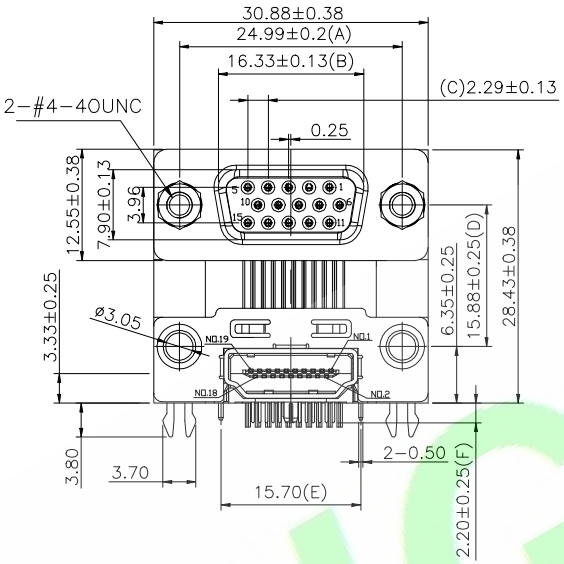

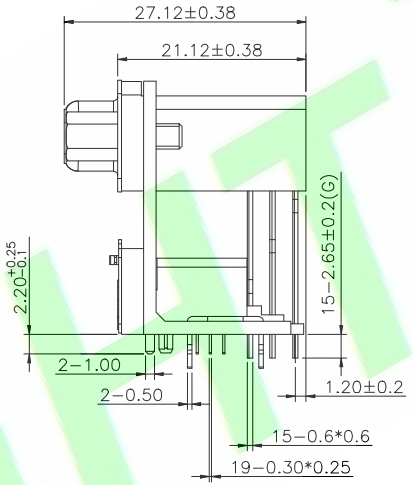

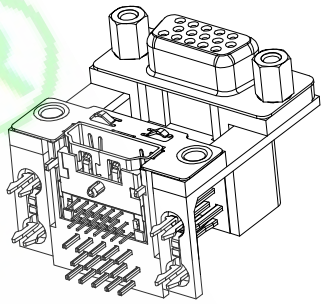

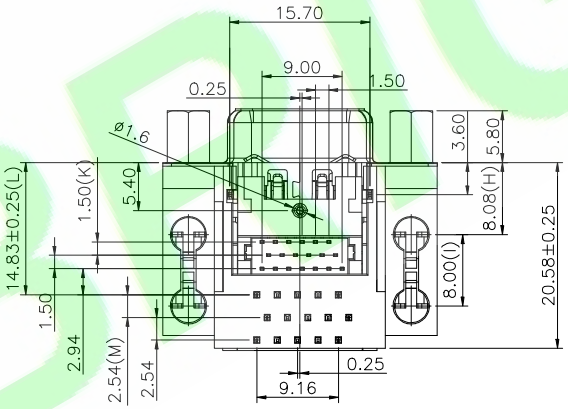

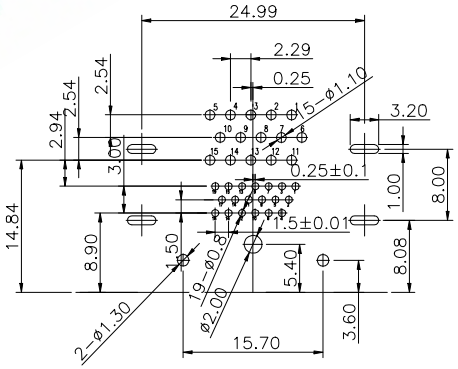

RECOMMNDED P.C.B LATOUT
INSPECTION DIMENSION:(A)~(M)

1X	ORIGNINAL	Bin	
REV.	DESCRIPTION	DR.BY	ECN. NO.

DR.BY.: Bin
CHKD.: Judyyan
APPD.: Billy

GENERAL TOLERANCE:			
LINEAR		ANGLES	
X.:	±0.38	X°:	±2.0°
X.X:	±0.35	X.X°:	±1.0°
X.XX:	±0.25	X.XX°:	±0.5°
X.XXX:	±0.15	X.XXX°:	±0.1°

PART NO : DBHDMIR-15FX19MX-X
DWG. NO.:
TITLE : VGA15F/HDMI 15.88mm double-layer
DATE: 26-Dec-2023

HJBRIGHT® 東莞市華晶電子有限公司
BRIGHT-E TECHNOLOGY ELECTRONIC LIMITED

SHEET: 1/1
SCALE: 1:1
UNIT: mm
THIRD ANGLE PROJECTION
A4

HJBRIGHT®