RoHS Compliant

Specifications:
Material And Finish: phosphor bronze
Wire Range:AWG#24~28
Insulation O.D.: 1.3(max)

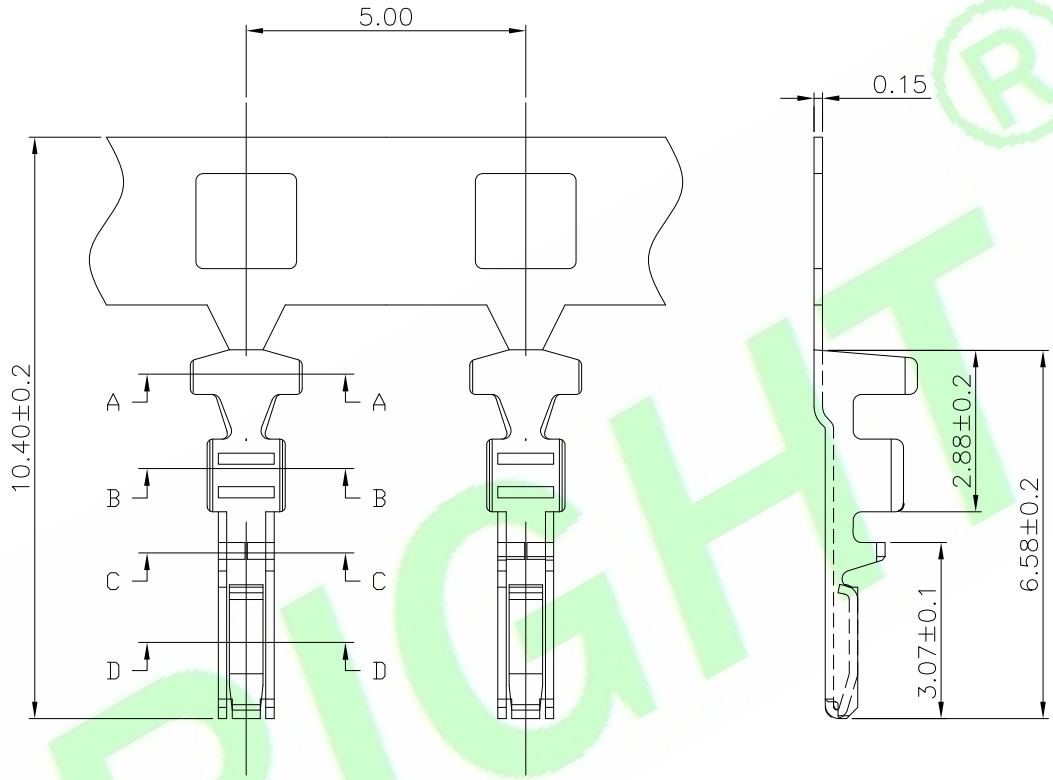

Ordering Information
H15005T–PX
1 2 3

1: —— Series No.
2: —— T:Terminal
3: —— Plated:
A:Gold falsh
Q:Tin Plated

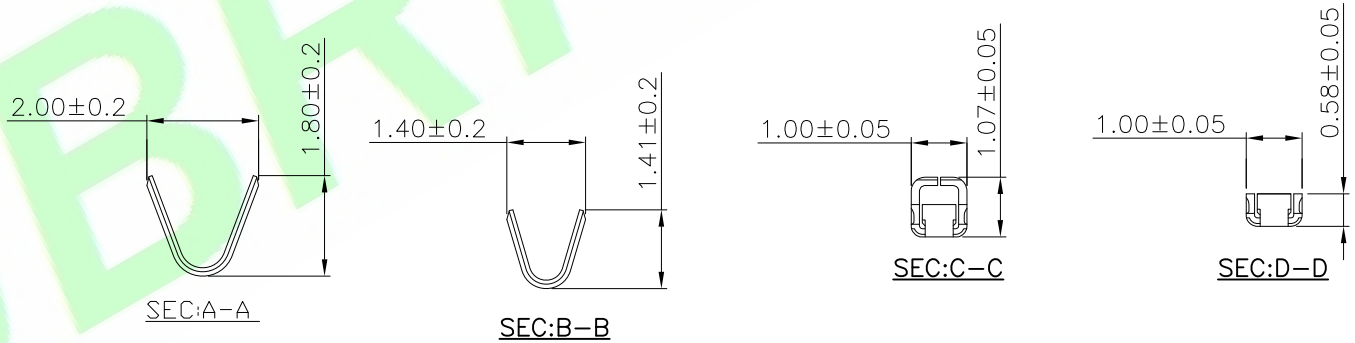

REV.	DESCRIPTION	DR.BY	ECN. NO.
5X			
4X			
3X			
2X			
1X	ORIGINAL	Ken	

DR.BY.: Ken
CHKD.: Mark
APPD.: Billy

GENERAL TOLERANCE:			
LINEAR		ANGLES	
X.:		X°:	±5.0°
X.X:	±0.25	X.X°:	±3.0°
X.XX:	±0.15	X.XX°:	±2.0°
X.XXX:	±0.08	X.XXX°:	±1.0°

PART NO : H15005T–PX
DWG. NO.:
TITLE : 1.5mm Pitch Crimp Terminal
DATE: 21–Oct–2017

HJBRIGHT® 東莞市華晶電子有限公司
BRIGHT–E ELECTRONIC TECHNOLOGY LIMITED

SHEET: 1/1
SCALE: 1:1
UNIT: mm
THIRD ANGLE PROJECTION
A4

HJBRIGHT®