RoHS Compliant

Specifications:

Material And Finish

Insulator:Copper alloy
Plated:See Ordering Information

Rating:

Current Rating:40A Amps (With 10 AWG)
:60A Amps (With 8 AWG)
:80A Amps (With 6 AWG)
:100A Amps (With 4 AWG)
:110A Amps (With 2 AWG)
Operating Temperature Range:−40°~+125°C

Electrical:

Contact resistance:0.1m Ohm Max
Insulator resistance:5000M ohm min.
Withstanding Voltage:2200V DC/Minute

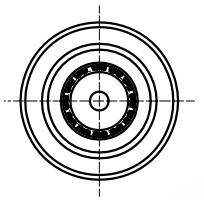

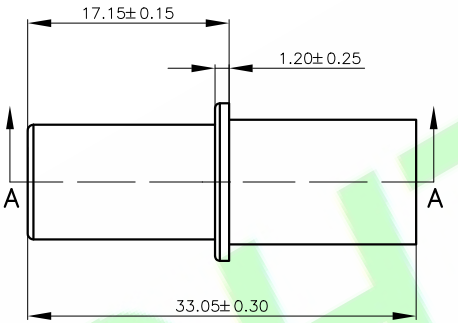

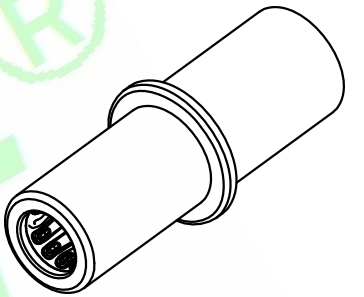

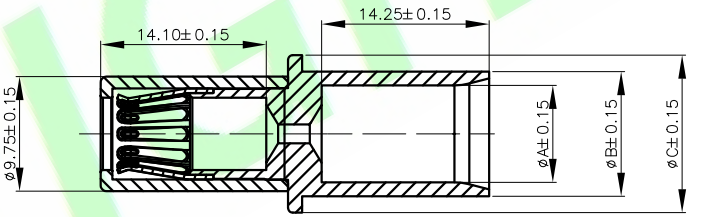

A–A

Ordering Information

H1700TFP−PAG−XX
1 2 3 4 5

1: —— Series No.
2: —— TF:Female Terminal
3: —— P:Power Pin
4: —— AG:Contact area Gold;Rest pure Silver
5: —— 01:For 2 AWG
02:For 6 AWG
03:For 10 AWG
04:For 4 AWG
05:For 8 AWG
06:For 2+ AWG

PART NUMBER	Dimension mm			Note
	A	B	C	
01	ø8.25	ø10.60	ø13.40	For 2 AWG
02	ø5.40	ø8.00	ø13.40	For 6 AWG
03	ø3.40	ø5.40	ø12.40	For 10 AWG
04	ø6.80	ø9.10	ø13.40	For 4 AWG
05	ø4.20	ø5.80	ø12.40	For 8 AWG
06	ø8.60	ø10.95	ø13.40	For 2+ AWG

REV.	DESCRIPTION	DR.BY	ECN. NO.
1X	ORIGINAL	JoinZm	

DR.BY.: JoinZm
CHKD.: Judyyan
APPD.: Billy

GENERAL TOLERANCE:	
LINEAR	ANGLES
X.:	X°:
X.X: ±0.10	X.X°:
X.XX: ±0.05	X.XX°:
X.XXX: ±0.02	X.XXX°:

PART NO : H1700TFP−PAG−XX
DWG. NO.:
TITLE : PH17.0mm Power Pin Female Terminal
DATE: 08−Nov−2023

HJBRIGHT® 東莞市華晶電子有限公司
BRIGHT−E ELECTRONIC TECHNOLOGY LIMITED

SHEET: 1/1
SCALE: 1:1
UNIT: mm
THIRD ANGLE PROJECTION
A4

HJBRIGHT®