RoHS Compliant

Specifications:
Material: Phosphoric Bronze
Applicable wire sizes: AWG#22~28#

Rating:
Current Rating: 3.0 Amp (22AWG)
Voltage Rating: 250V AC/DC
Operating Temperature Range: −40°~+105°C

Electrical:
Contact resistance: 10m Ohm Max
Insulator resistance: 1000M ohm min.
Withstanding Voltage: 1000V AC/Minute

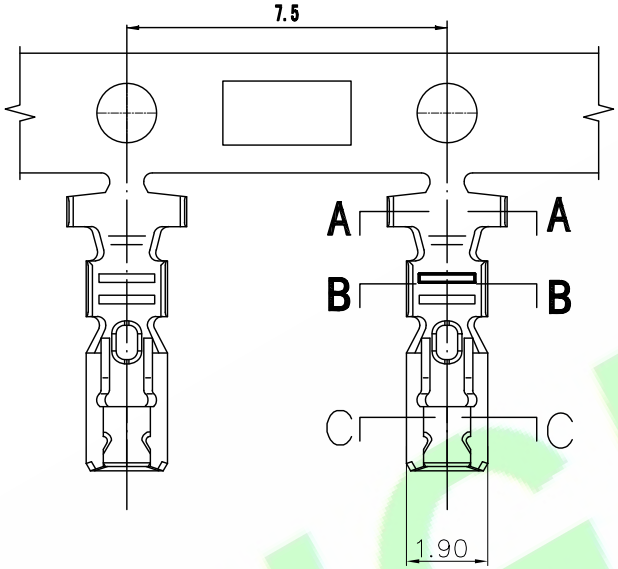

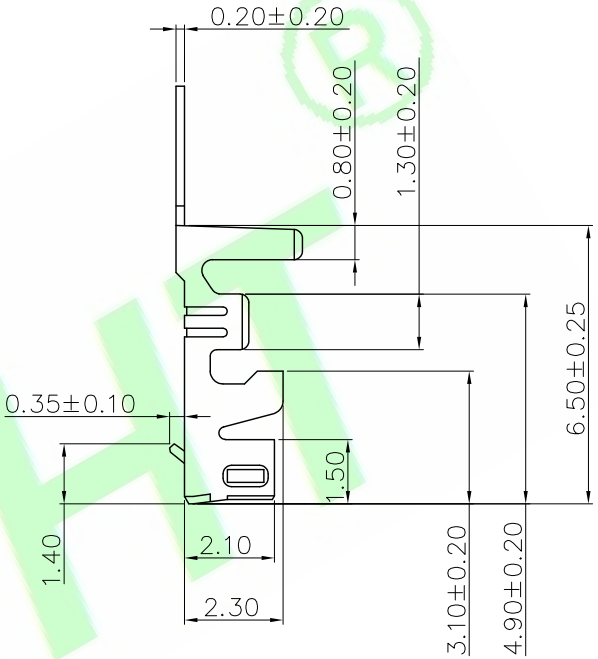

Ordering Information
H2505T−PX
1 2 3

1: —— Series No.
2: —— T: Terminal
3: —— A: Gold flash
Q: Plated Tin

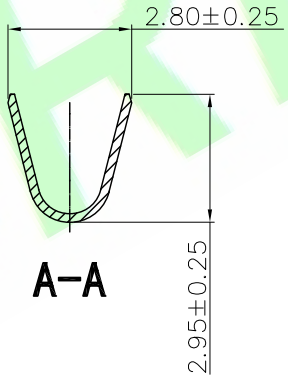

A−A

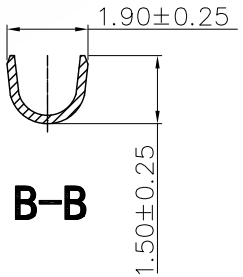

B−B

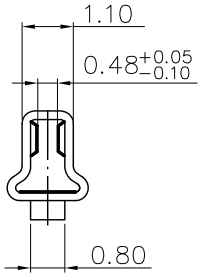

C−C

REV.	DESCRIPTION	DR.BY	ECN. NO.
5X			
4X			
3X			
2X			
1X	ORIGINAL	Ken	

DR.BY.: Ken
CHKD.: Mark
APPD.: Billy

GENERAL TOLERANCE:

LINEAR		ANGLES	
X.:	±0.30	X°:	±5.0°
X.X:	±0.20	X.X°:	±3.0°
X.XX:	±0.15	X.XX°:	±2.0°
X.XXX:	±0.10	X.XXX°:	±1.0°

PART NO : H2505T−PX
DWG. NO.:
TITLE : H2505 端子
DATE: 21−Jul−2022

HJBRIGHT® 東莞市華晶電子有限公司
BRIGHT−E ELECTRONIC TECHNOLOGY LIMITED

SHEET: 1/1
SCALE: 1:1
UNIT: mm
THIRD ANGLE PROJECTION
A4

HJBRIGHT®