RoHS Compliant

Automobile Product

Specifications:
Material And Finish:
Material : Copper alloy
Wire Rang: See Orderinformation

USCAR conform

Ordering Information
H25082TL-PQ-X
1 2 3 4

1:—— Series No.
2:—— Terminal
3:—— Q:Tin Plated
4:—— A:0.5-0.75mm² (AWG#20-18)
B:0.25-0.35mm² (AWG#23-22)
C:0.08-0.2mm² (AWG#28-24)

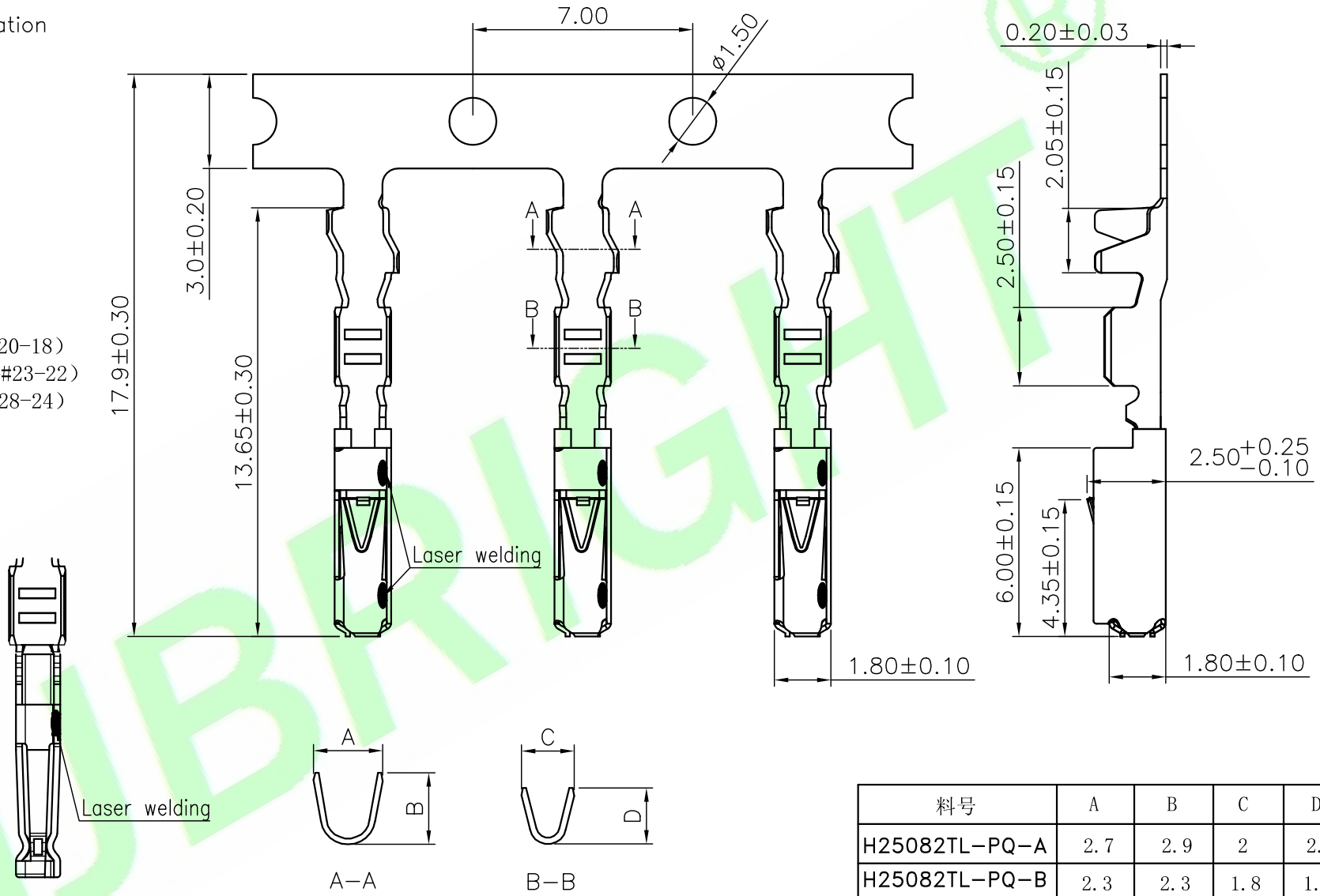

料号	A	B	C	D
H25082TL-PQ-A	2.7	2.9	2	2.1
H25082TL-PQ-B	2.3	2.3	1.8	1.8
H25082TL-PQ-C	2	2	1.5	1.5

REV.	DESCRIPTION	DR.BY	ECN. NO.
5X			
4X			
3X			
2X			
1X	ORIGINAL	Sophia	

DR.BY.: Sophia
CHKD.: Ren
APPD.: Billy

GENERAL TOLERANCE:	
LINEAR	ANGLES
X.:	X°:
X.X: ±0.30	X.X°:
X.XX: ±0.20	X.XX°:
X.XXX: ±0.10	X.XXX°:

PART NO :H25082TL-PQ-X
DWG. NO.:
TITLE : H25082 Series of terminals
DATE: 20-Aug-2020

HJBRIGHT® 東莞市華晶電子有限公司
BRIGHT-E ELECTRONIC TECHNOLOGY LIMITED

SHEET: 1/1
SCALE: 1:1
UNIT: mm
THIRD ANGLE PROJECTION
A4