RoHS Compliant

Automobile Product

Specifications:
Material And Finish:
Insulator:PBT UL94V-0
Color:Natural or Brown
Operating Temperature Range:-40°~+105°C
Contact resistance:20m Ohm Max
Insulator resistance:100M ohm min.

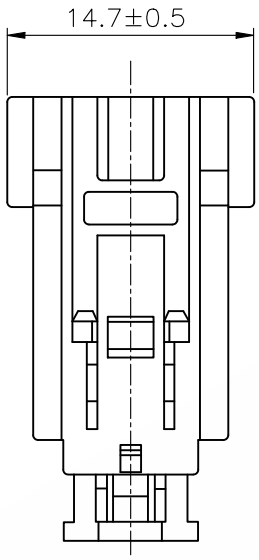

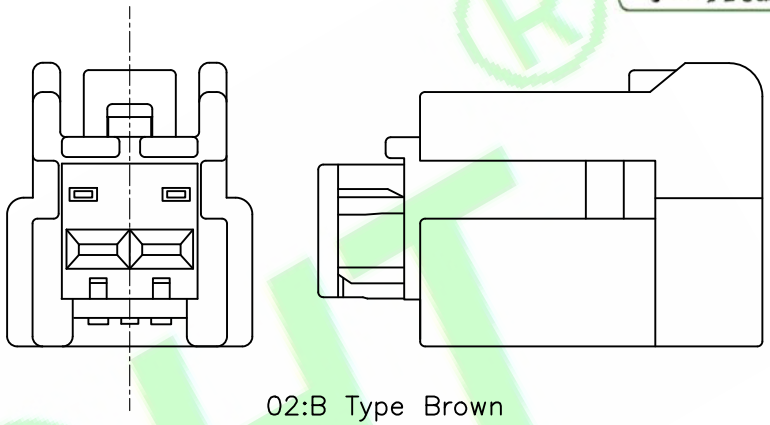

02:B Type Brown

Ordering Information
H3800M-02P-XX-X
1 2 3 4 5

1:—Series No.
2:—M:Male Housing
3:—No. of Positions
4:—01:A Type Natural
02:B Type Brown
5:—A:In Bag
C:In Tray

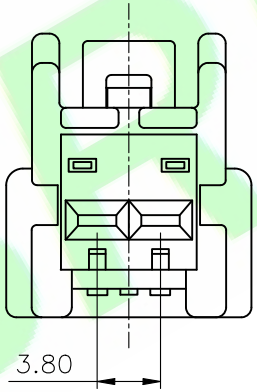

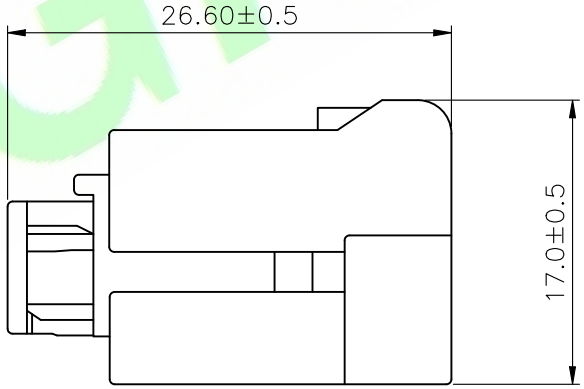

01:A Type Natural

HJBRIGHT®

1X	ORIGINAL	Judyyan	
REV.	DESCRIPTION	DR.BY	ECN. NO.

DR.BY.: Judyyan	GENERAL TOLERANCE:	
	LINEAR	ANGLES
CHKD.: Tony	X.: ±0.40	X°: ±5.0°
	X.X: ±0.30	X.X°: ±3.0°
APPD.: Billy	X.XX: ±0.20	X.XX°: ±2.0°
	X.XXX: ±0.10	X.XXX°: ±1.0°

PART NO : H3800M-02P-XX-X	HJBRIGHT® 東莞市華晶電子有限公司 BRIGHT-E ELECTRONIC TECHNOLOGY LIMITED
DWG. NO.:	
TITLE : 3.30mm Pitch Male Housing	SHEET: 1/1
	SCALE: 1:1
DATE: 20-Nov-2024	UNIT: mm

THIRD ANGLE PROJECTION

A4