RoHS Compliant

Specifications:
Material And Finish:
Material:Brass/Phosphor copper

Rating:
Current Rating:5A AC,DC
Voltage Rating:300V AC,DC

Ordering Information
H41400TF–PX–XX–B–X
1 2 3 4 5 6

1: —— Series No.
2: —— T:Female Terminal
3: —— A:Glod Flash
Q:plated Tin
4: —— 01:16~20AWG(1.3~0.5MM2)
02:18~24AWG(0.8~0.2MM2)
03:15~18AWG(1.6~0.8MM2)
5: —— B:(Low insertion force)
6: —— B:Brass
P:Phosphor copper

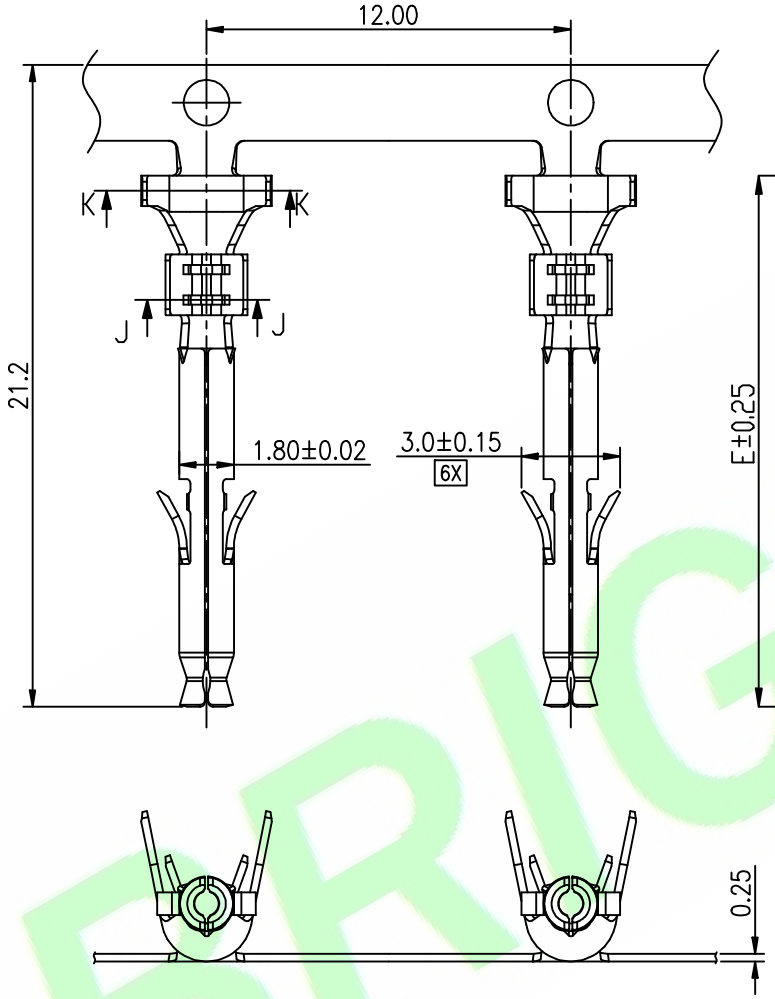

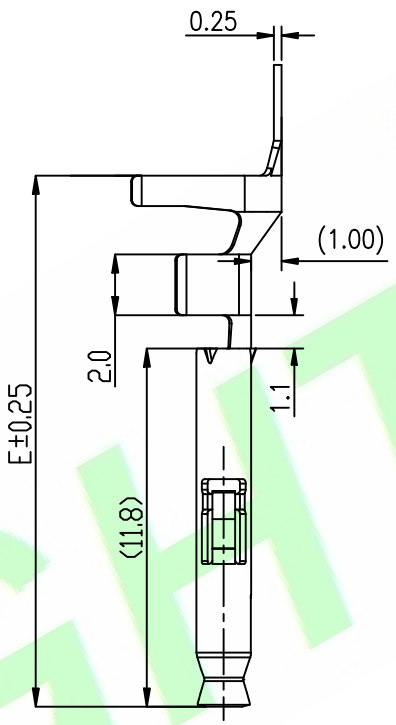

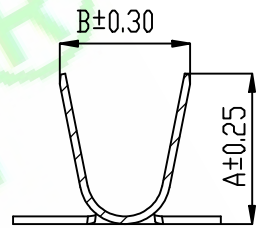

K–K

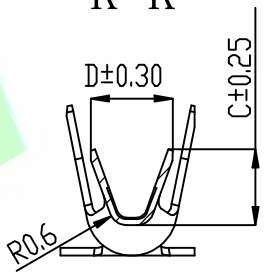

J–J

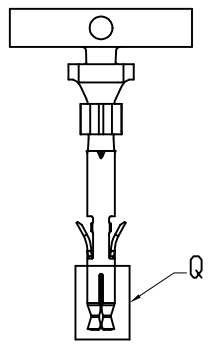

Back View

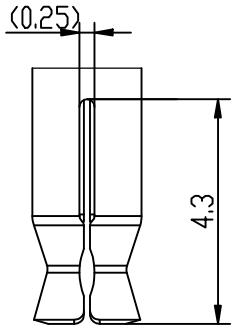

Q View
Enlarged drawing

Part No.	A	B	C	D	E	Applicable wire diameter	
H41400TF-PX-01-B-X	4.95	4.30	2.65	2.70	17.7	AWG #16-20(1.3~0.5MM2)	Low insertion force
H41400TF-PX-02-B-X	4.40	3.70	2.20	2.30	17.4	AWG #18-24(0.8~0.35MM2)	
H41400TF-PX-03-B-X	4.95	4.30	2.90	3.00	17.7	AWG #15-18(1.6~0.8MM2)	

REV.	DESCRIPTION	DR.BY	ECN. NO.
6X	corrected parameter	Judyyan	20250704
5X	Add coding options	Judyyan	20250618
4X	Add coding options	Judyyan	20241005
3X	Dimensional change	Judyyan	20230923
2X	Update code options	Judyyan	20220819

DR.BY.: Samson
CHKD.: Tony
APPD.: Billy

GENERAL TOLERANCE:

LINEAR		ANGLES	
X.:	±0.30	X°:	±5.0°
X.X:	±0.20	X.X°:	±3.0°
X.XX:	±0.15	X.XX°:	±2.0°
X.XXX:	±0.10	X.XXX°:	±1.0°

PART NO : H41400TF–PX–XX–B–X
DWG. NO.:
TITLE : 4.14mm Pitch Female Terminal Low insertion force
DATE: 22–Feb–2020

HJBRIGHT® 東莞市華晶電子有限公司
BRIGHT–E ELECTRONIC TECHNOLOGY LIMITED

SHEET: 1/1
SCALE: 1:1
UNIT: mm
THIRD ANGLE PROJECTION
A4

HJBRIGHT®