RoHS Compliant

Specifications:
Material And Finish:
Material:Brass

Rating:
Current Rating:5A AC,DC
Voltage Rating:300V AC,DC

Ordering Information
H41400TF-PX-XX-B
1 2 3 4 5

1: —— Series No.
2: —— T:Female Terminal
3: —— A:Glod Flash
Q:plated Tin
4: —— 01:16~20AWG(1.3~0.5MM2)
02:18~24AWG(0.8~0.2MM2)
03:15~18AWG(1.6~0.8MM2)
5: —— B:(Low insertion force)

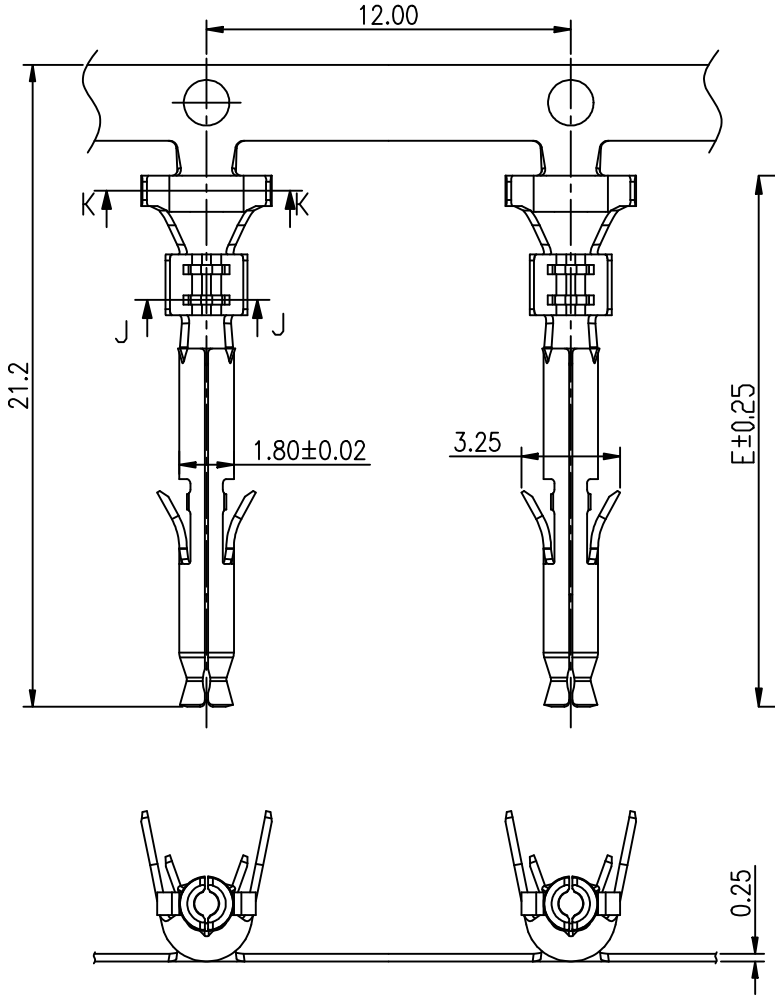

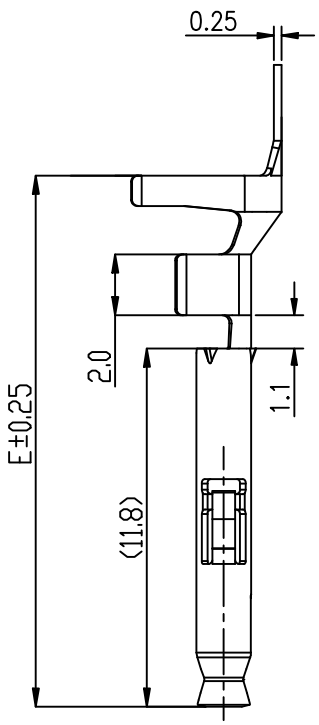

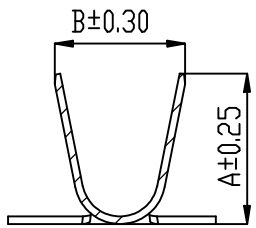

K-K

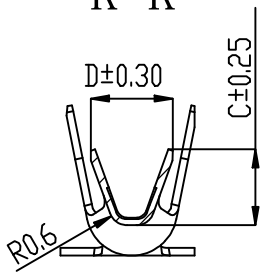

J-J

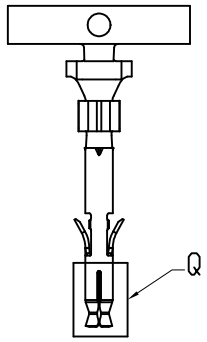

Back View

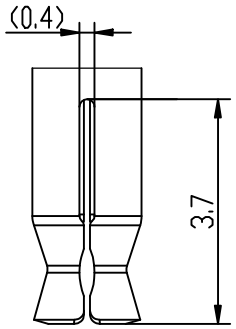

Q View
Enlarged drawing

Part No.	A	B	C	D	E	Applicable wire diameter
H41400TF-PX-01-B	4.95	4.30	2.65	2.70	17.7	AWG #16-20(1.3~0.5MM2)
H41400TF-PX-02-B	4.40	3.70	2.20	2.30	17.4	AWG #18-24(0.8~0.2MM2)
H41400TF-PX-03-B	4.95	4.30	2.90	3.00	17.7	AWG #15-18(1.6~0.8MM2)

REV.	DESCRIPTION	DR.BY	ECN. NO.
4X	Add coding options	Judyyan	20241005
3X	Dimensional change	Judyyan	20230923
2X	Update code options	Judyyan	20220819
1X	ORIGINAL	Samson	

DR.BY.: Samson
CHKD.: Tony
APPD.: Billy

GENERAL TOLERANCE:

LINEAR		ANGLES	
X.:	±0.30	X°:	±5.0°
X.X:	±0.20	X.X°:	±3.0°
X.XX:	±0.15	X.XX°:	±2.0°
X.XXX:	±0.10	X.XXX°:	±1.0°

PART NO : H41400TF-PX-XX-X
DWG. NO.:
TITLE : 4.14mm Pitch Female Terminal Low insertion force
DATE: 22-Feb-2020

HJBRIGHT® 東莞市華晶電子有限公司
BRIGHT-E ELECTRONIC TECHNOLOGY LIMITED

SHEET: 1/1
SCALE: 1:1
UNIT: mm
THIRD ANGLE PROJECTION
A4