HJBRIGHT®

.098”(2.50mm) Pitch/Disconnectable Insulation Displacement Connectors

.098”(2.50mm) Connectors

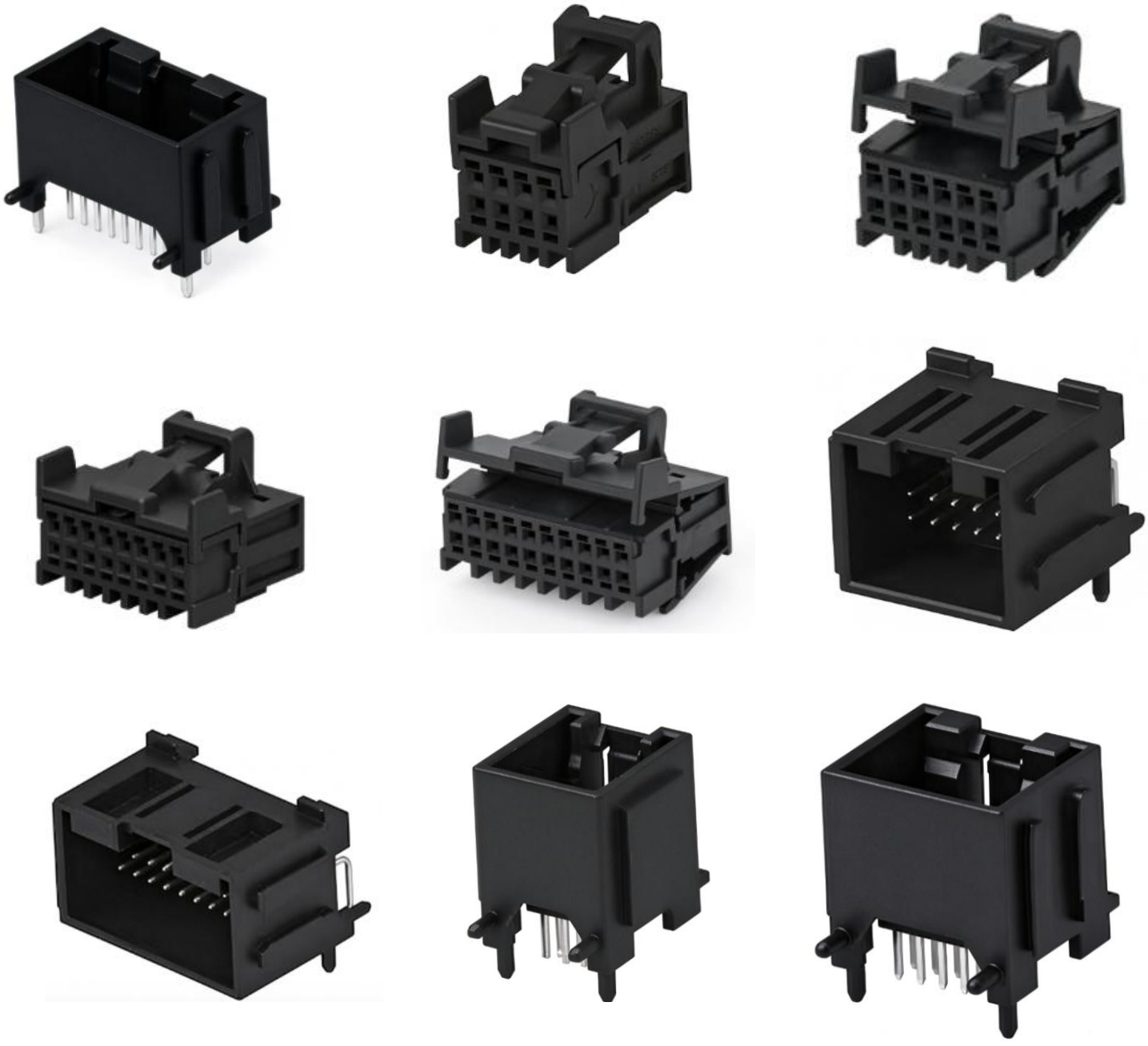

东莞市华晶电子有限公司
http: //www.hjbright.com

.098”(2.50mm)Female Header

.098”(2.50mm) Pitch/Disconnectable Insulation Displacement Connectors

.098”(2.50mm) Connectors









HJBRIGHT®

.098"(2.50mm)Female Header



Specifications:
Material And Finish:
Insulator:PA10T/SPS UL94V-0
Color:See Ordering Information
Contact:CuZn30
Plated:See Ordering Information

Rating:
Current Rating:7.5A
Voltage Rating:250V
Temperature Rating:-40°C~105°C

Electrical:
Contact resistance:20m Ohm Max
Insulator resistance:100M Ohm min
Dielectric strength:1000V DC/Minute

Ordering Information
A25002S-20X-XX-X
1 2 3 4 5 6

1:—Series No.
2:—S:Straight Type
3:—No.of Positions
4:—S:Matte Tin Plated
Q:Tin Plated
5:—01:Coding A-D Black
02:Coding B-C Brown
03:Coding B-D Blue
04:Coding A-C Green
6:—B:In Tube
C:In Tray
G:Tape&Reel

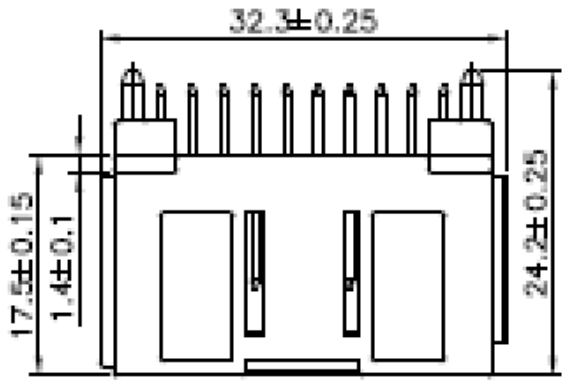

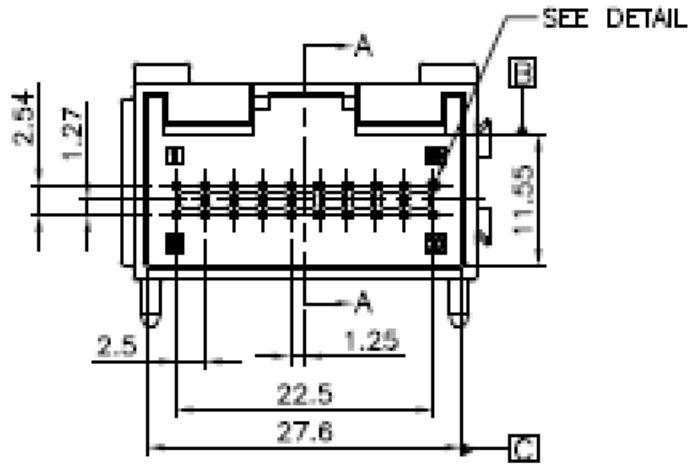

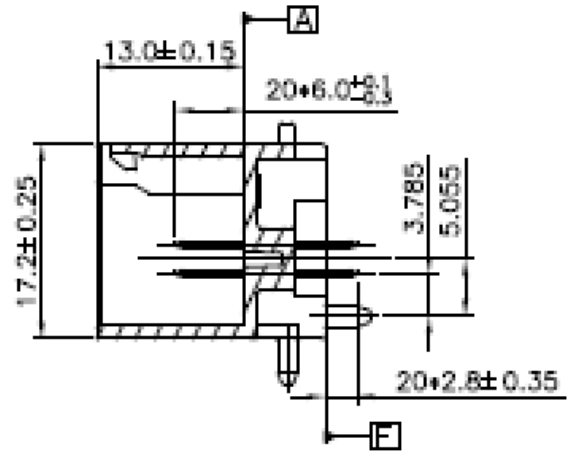

SECTION A-A

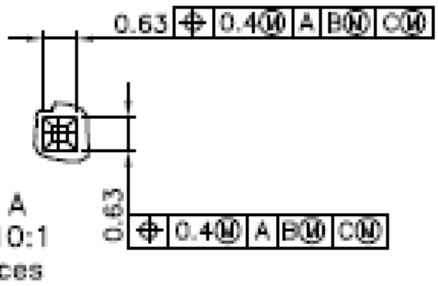

Detail A
Scale 10:1
20 Places

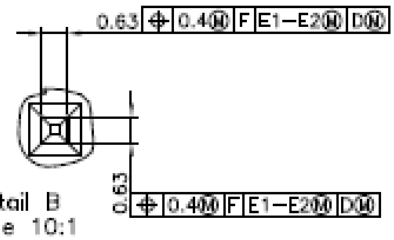

Detail B
Scale 10:1
20 Places

东莞市华晶电子有限公司
http: //www.hjbright.com

.098”(2.50mm)Female Header

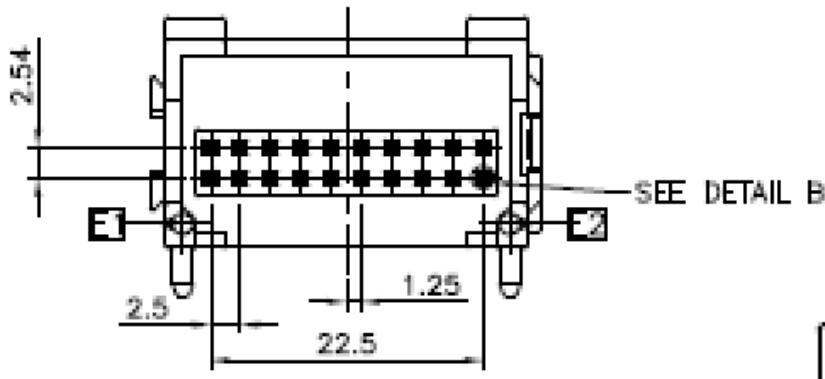

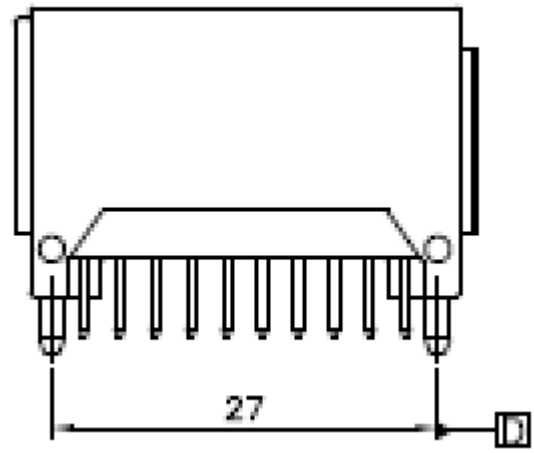

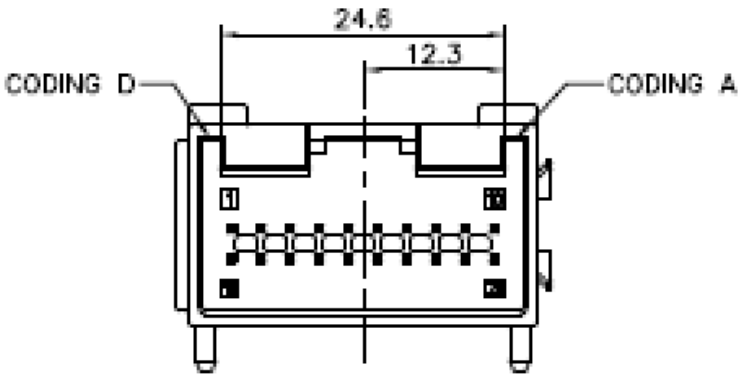

CODING A–D

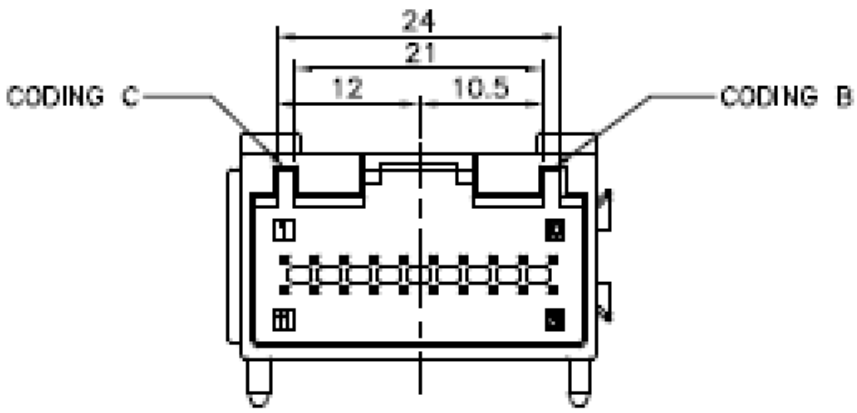

CODING B–C

东莞市华晶电子有限公司
http: //www.hjbright.com

.098"(2.50mm)Female Header



Specifications:
Material And Finish:
Insulator:PBT UL94V–0
Color:See Ordering Information

Rating:
Current Rating:5A
Voltage Rating:250V
Temperature Rating:–40℃~105℃

Electrical:
Contact resistance:20m Ohm Max
Insulator resistance:100M Ohm min
Dielectric strength:1000V DC/Minute

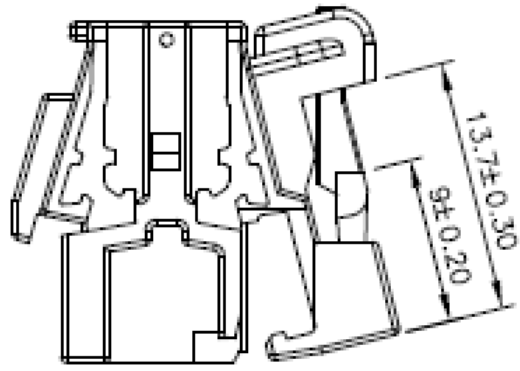

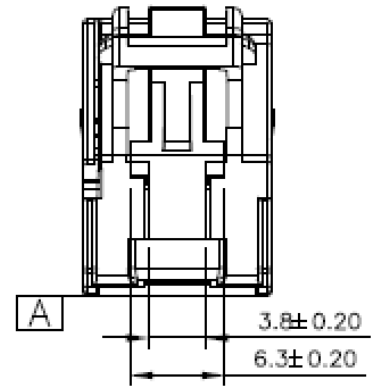

Ordering Information

H25002M–08P–XX–X
1 2 3 4 5

1:—— Series No.
2:—— M:Male
3:—— No.of Positions
4:—— 01:Coding A–D Black
02:Coding B–C Brown
03:Coding B–D Blue
04:Coding A–C Green
5:—— B:In Tube
C:In Tray
G:Tape&Reel

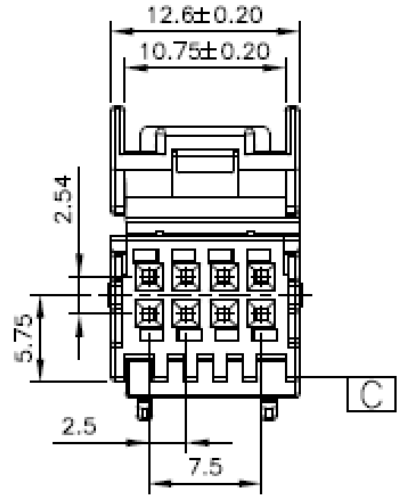

CODING A–D

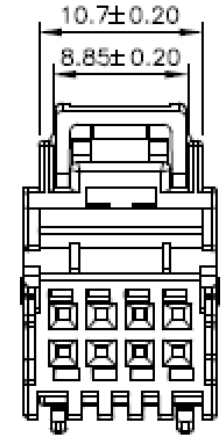

CODING B–C

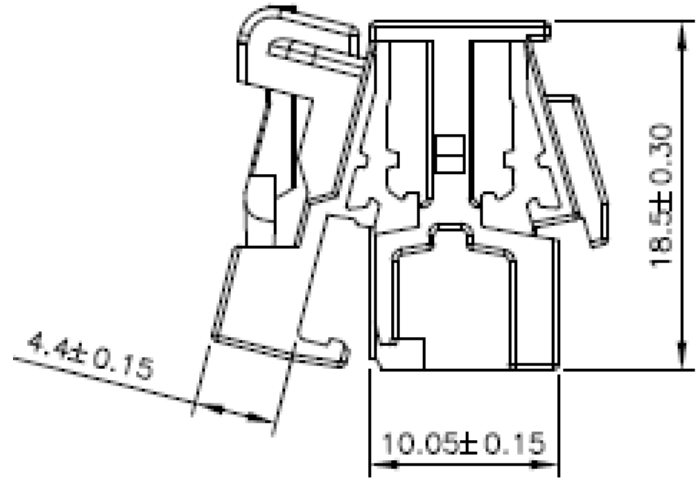

.098"(2.50mm)Female Header



Specifications:
Material And Finish:
Insulator:PBT UL94V–0
Color:See Ordering Information

Rating:
Current Rating:5A
Voltage Rating:250V
Temperature Rating:–40℃~105℃

Electrical:
Contact resistance:20m Ohm Max
Insulator resistance:100M Ohm min
Dielectric strength:1000V DC/Minute

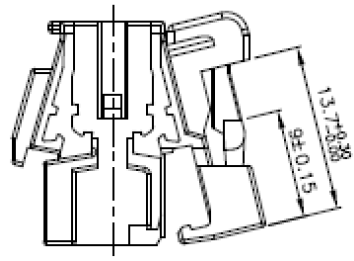

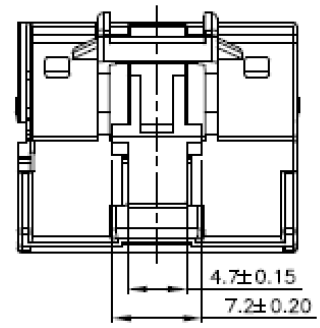

Ordering Information
H25002M–16P–XX–X
1 2 3 4 5

1:—— Series No.
2:—— M:Male
3:—— No.of Positions
4:—— 01:Coding A–D Black
02:Coding B–C Brown
03:Coding B–D Blue
04:Coding A–C Green
5:—— B:In Tube
C:In Tray
G:Tape&Reel

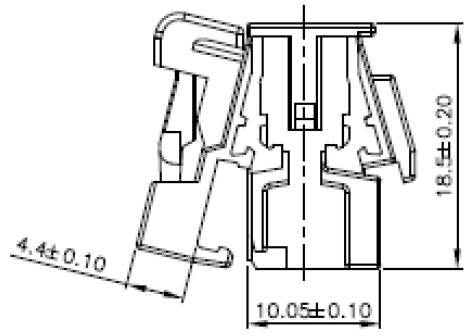

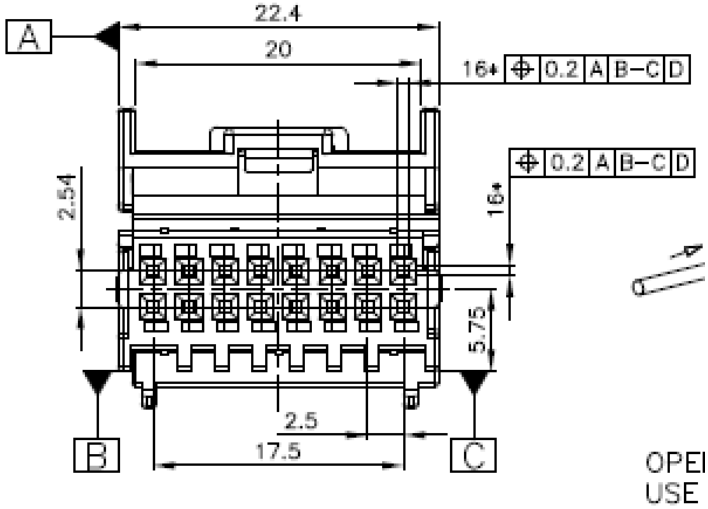

CODING A–D

OPEI
USE
PUSI

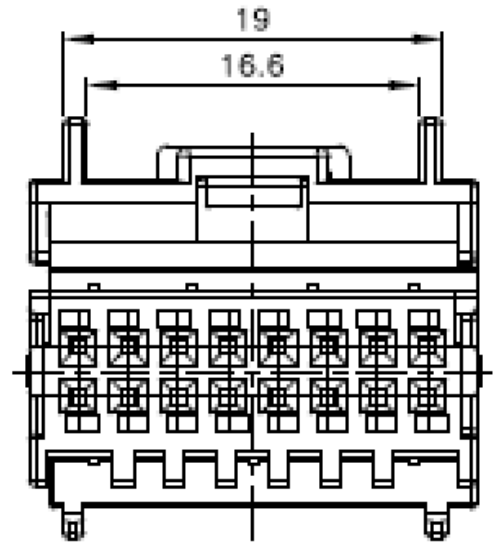

CODING B–C

东莞市华晶电子有限公司
http: //www.hjbright.com

.098"(2.50mm)Female Header



Specifications:
Material And Finish:
Insulator:PBT UL94V–0
Color:See Ordering Information

Rating:
Current Rating:5A
Voltage Rating:250V
Temperature Rating:–40°C~105°C

Electrical:
Contact resistance:20m Ohm Max
Insulator resistance:100M Ohm min
Dielectric strength:1000V DC/Minute

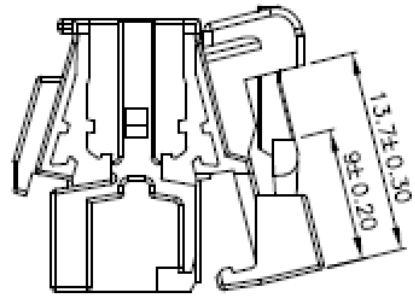

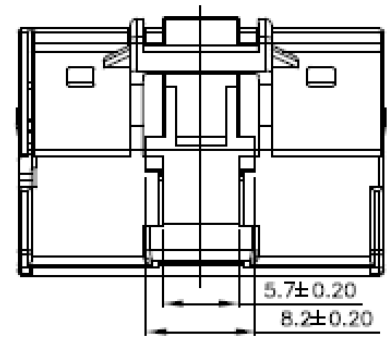

Ordering Information
H25002M–20P–XX–X
1 2 3 4 5

1: —— Series No.
2: —— M:Male
3: —— No.of Positions
4: —— 01:Coding A–D Black
02:Coding B–C Brown
03:Coding B–D Blue
04:Coding A–C Green
5: —— B:In Tube
C:In Tray
G:Tape&Reel

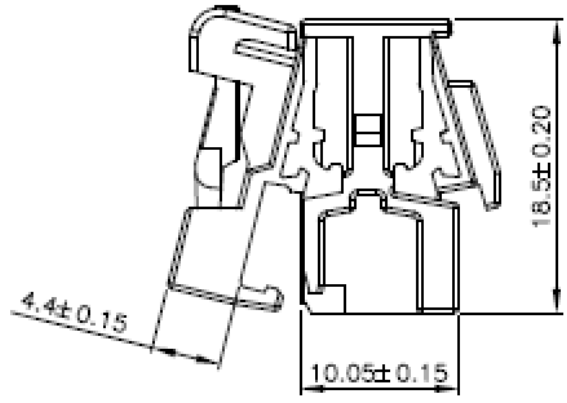

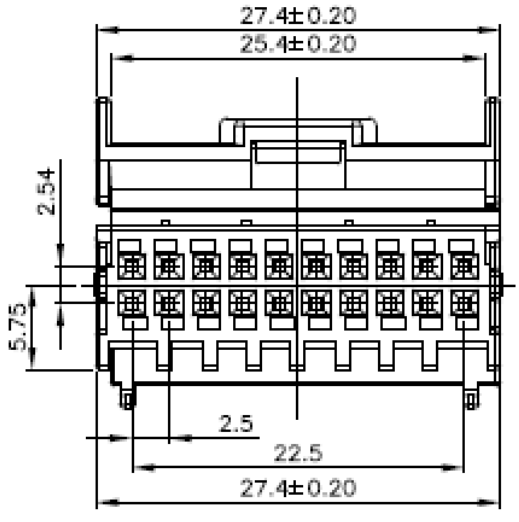

CODING A–D

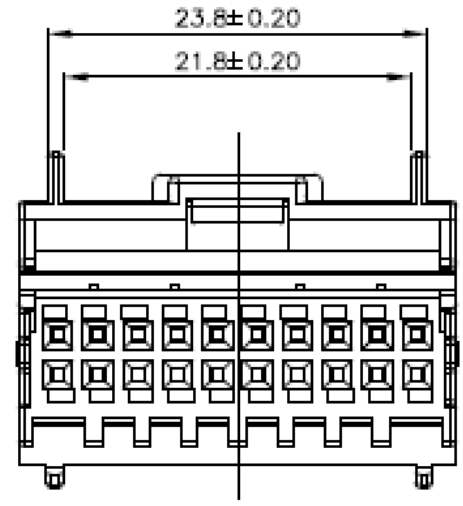

CODING B–C

东莞市华晶电子有限公司
http: //www.hjbright.com

.098"(2.50mm)Female Header



Specifications:
Material And Finish:
Insulator:PA10T/SPS UL94V-0
Color:See Ordering Information
Contact:CuZn30
Plated:See Ordering Information

Rating:
Current Rating:7.5A
Voltage Rating:250V
Temperature Rating:-40°C~105°C

Electrical:
Contact resistance:20m Ohm Max
Insulator resistance:100M Ohm min
Dielectric strength:1000V DC/Minute

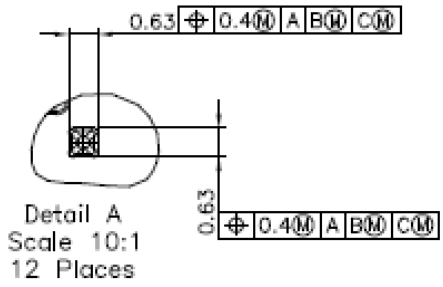

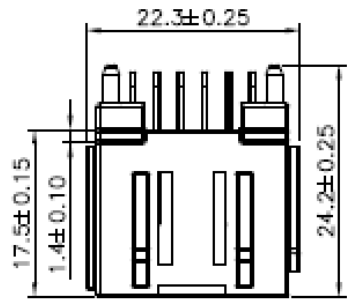

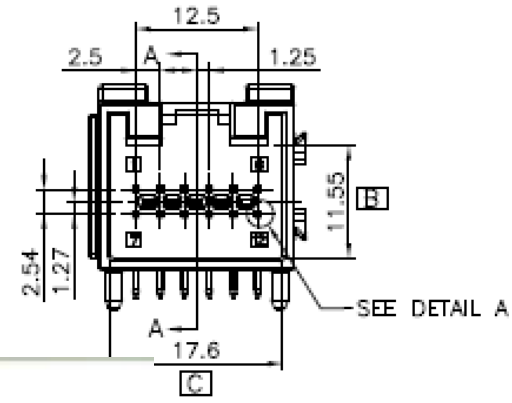

Ordering Information
A25002R-12X-XX-X
1 2 3 4 5 6

1: Series No.
2: R:R/A Type
3: No.of Positions
4: S:Matte Tin Plate
Q:Tin Plated
5: 01:Coding A-D
02:Coding B-C
03:Coding B-D
04:Coding A-C
6: B:In Tube
C:In Tray
G:Tape&Reel

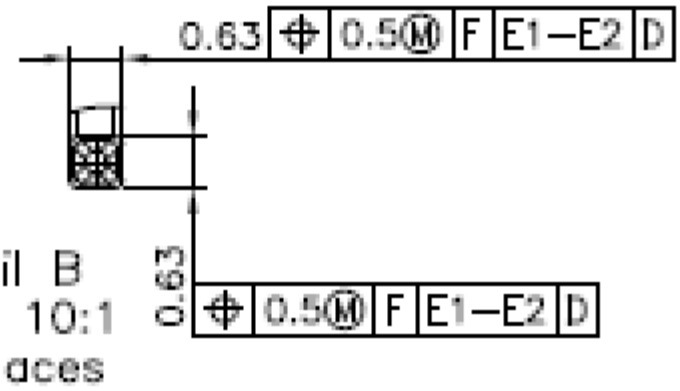

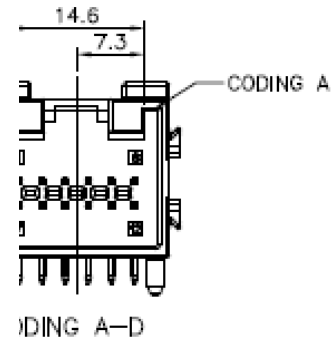

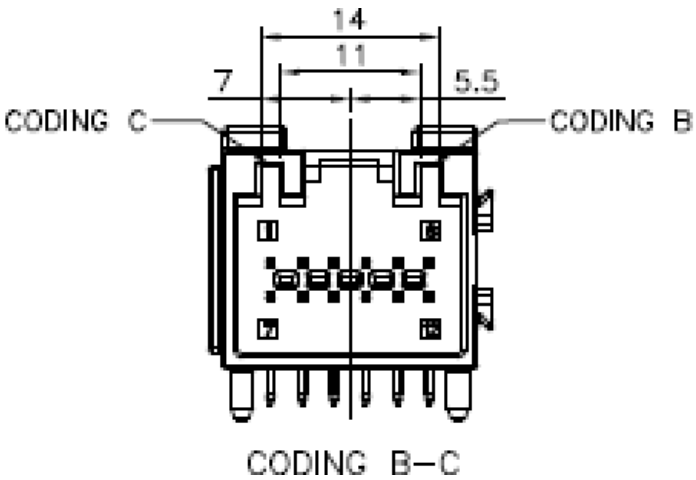

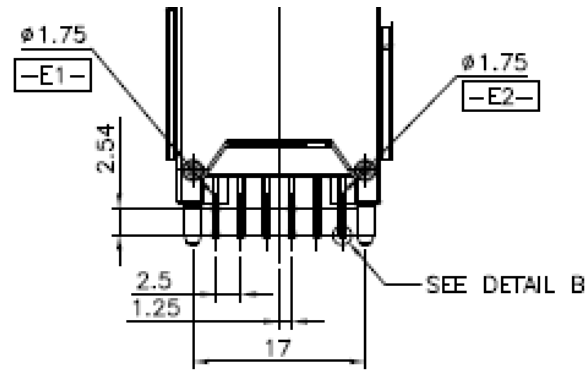

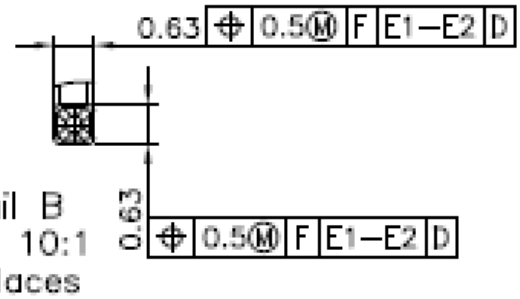

.098”(2.50mm)Female Header



Specifications:
Material And Finish:
Insulator:PA10T/SPS UL94V-0
Color:See Ordering Information
Contact:CuZn30
Plated:See Ordering Information

Rating:
Current Rating:7.5A
Voltage Rating:250V
Temperature Rating:-40°C~105°C

Electrical:
Contact resistance:20m Ohm Max
Insulator resistance:100M Ohm min
Dielectric strength:1000V DC/Minute

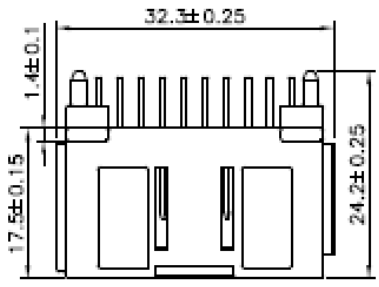

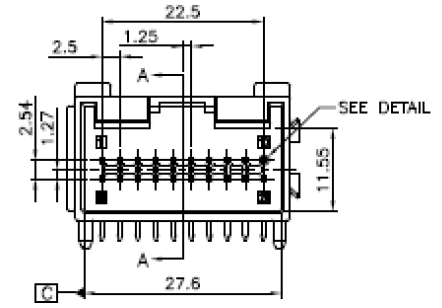

Ordering Information

A25002R-20X-XX-X
1 2 3 4 5 6

1:—— Series No.
2:—— R:R/A Type
3:—— No.of Positions
4:—— S:Matte Tin Plated
Q:Tin Plated
5:—— 01:Coding A-D Black
02:Coding B-C Brown
03:Coding B-D Blue
04:Coding A-C Green
6:—— B:In Tube
C:In Tray
G:Tape&Reel

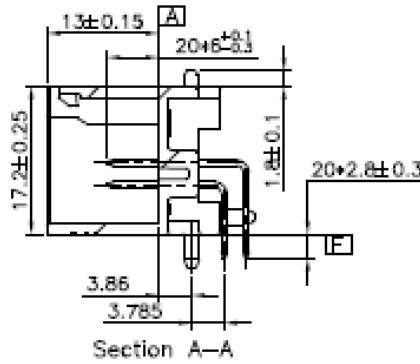

Section A-A

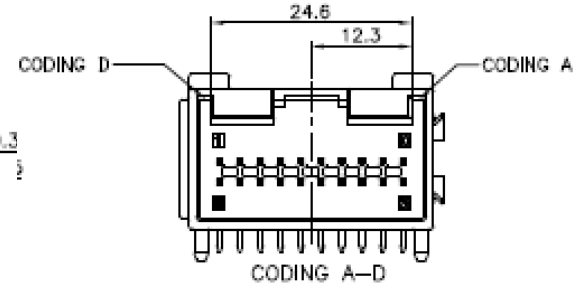

CODING A-D

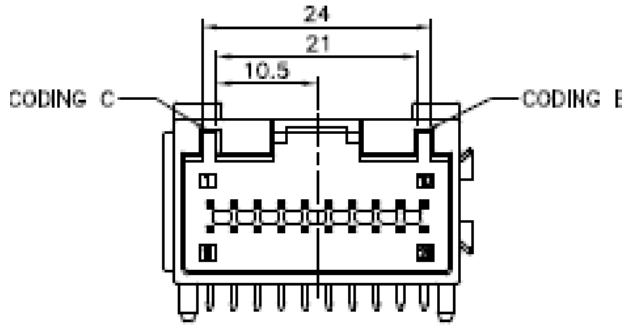

CODING B-C

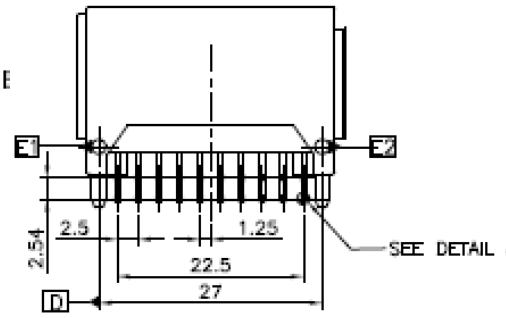

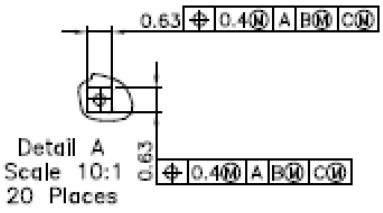

Detail A
Scale 10:1
20 Places

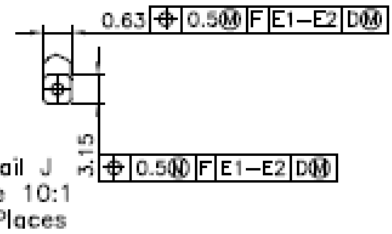

Detail J
Scale 10:1
20 Places

.098"(2.50mm)Female Header



Specifications:
Material And Finish:
Insulator:PA10T/SPS UL94V-0
Color:See Ordering Information
Contact:CuZn30
Plated:See Ordering Information

Rating:
Current Rating:7.5A
Voltage Rating:250V
Temperature Rating:-40°C~105°C

Electrical:
Contact resistance:20m Ohm Max
Insulator resistance:100M Ohm min
Dielectric strength:1000V DC/Minute

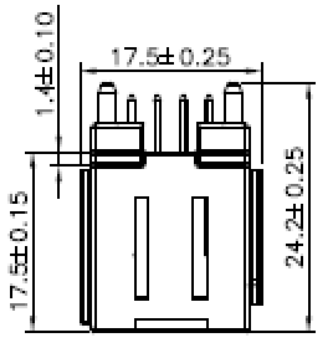

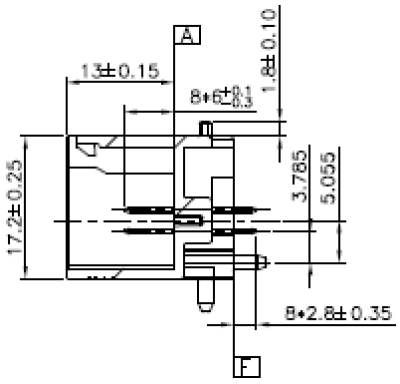

Ordering Information
A25002S-08X-XX-X
1 2 3 4 5 6

1: Series No.
2: S:Straight Type
3: No.of Positions
4: S:Matte Tin Plated
Q:Tin Plated
5: 01:Coding A-D Black
02:Coding B-C Brown
03:Coding B-D Blue
04:Coding A-C Green
6: B:In Tube
C:In Tray
G:Tape&Reel

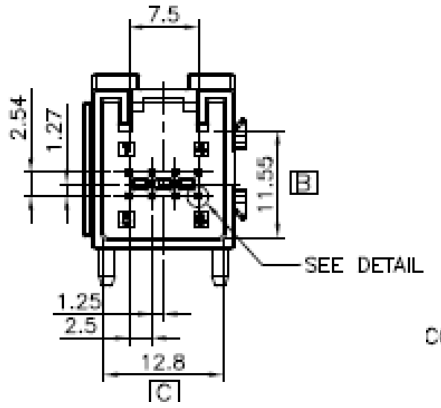

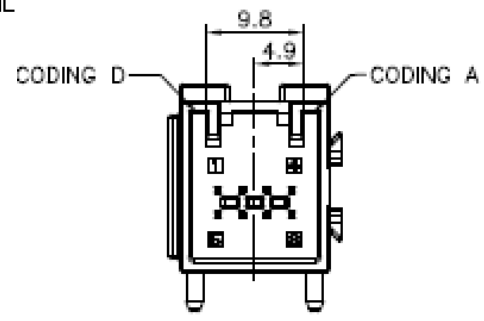

CODING A-D

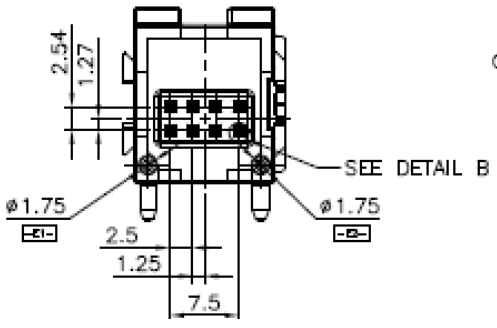

Detail A
Scale 10:1
8 Places

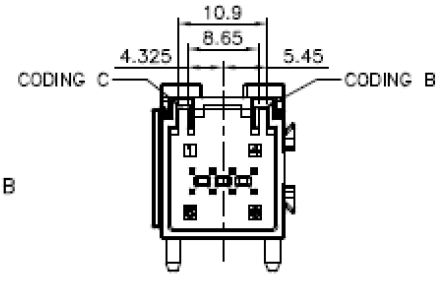

CODING B-C

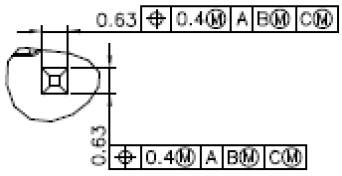

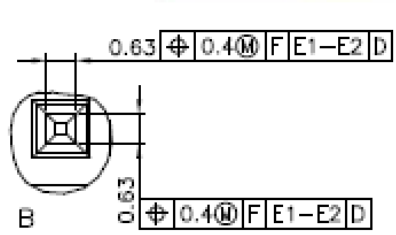

Detail B
Scale 10:1
8 Places

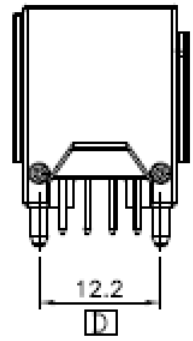

.098"(2.50mm)Female Header



Specifications:
Material And Finish:
Insulator:PA10T/SPS UL94V-0
Color:See Ordering Information
Contact:CuZn30
Plated:See Ordering Information

Rating:
Current Rating:7.5A
Voltage Rating:250V
Temperature Rating:-40°C~105°C

Electrical:
Contact resistance:20m Ohm Max
Insulator resistance:100M Ohm min
Dielectric strength:1000V DC/Minute

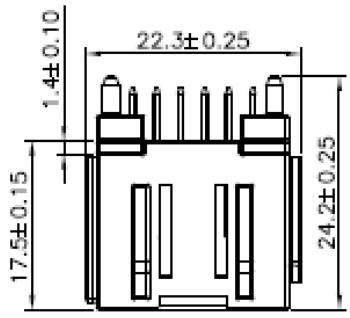

Ordering Information
A25002S-12X-XX-X
1 2 3 4 5 6

1: Series No.
2: S:Straight Type
3: No.of Positions
4: S:Matte Tin Plated
Q:Tin Plated
5: 01:Coding A-D Black
02:Coding B-C Brown
03:Coding B-D Blue
04:Coding A-C Green
6: B:In Tube
C:In Tray
G:Tape&Reel

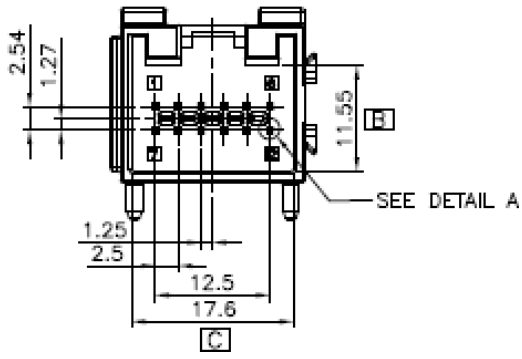

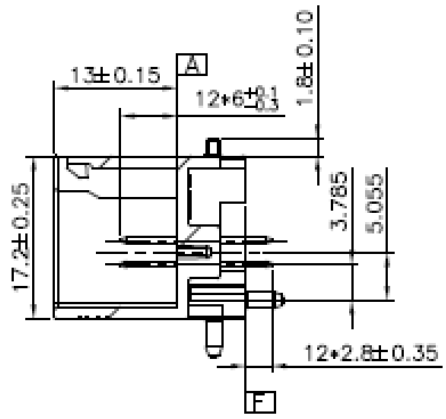

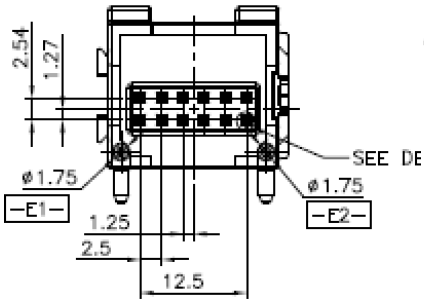

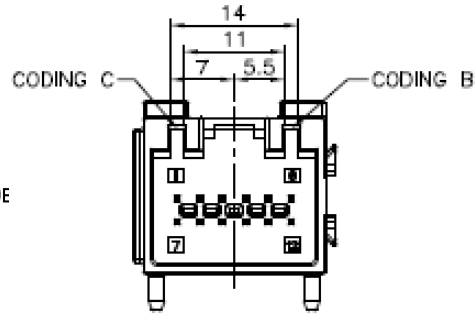

CODING B-C

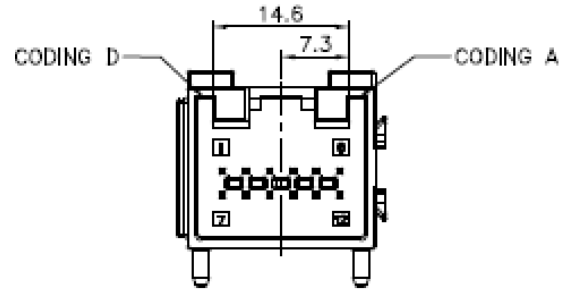

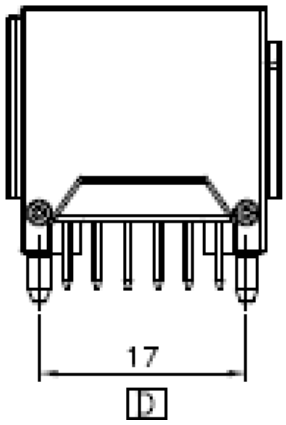

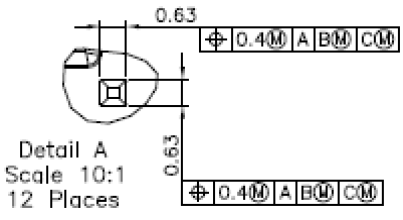

Detail A
Scale 10:1
12 Places

CODING A-D

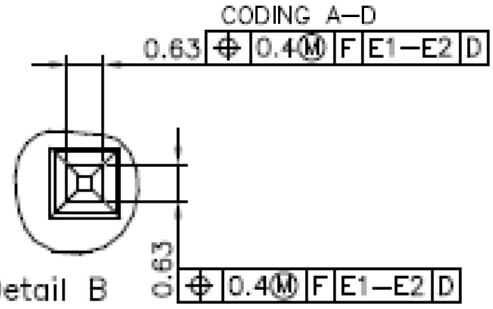

Detail B
Scale 10:1
12 Places

.098"(2.50mm)Female Header



Specifications:
Material And Finish:
Insulator:PA10T/SPS UL94V-0
Color:See Ordering Information
Contact:CuZn30
Plated:See Ordering Information

Rating:
Current Rating:7.5A
Voltage Rating:250V
Temperature Rating:-40°C~105°C

Electrical:
Contact resistance:20m Ohm Max
Insulator resistance:100M Ohm min
Dielectric strength:1000V DC/Minute

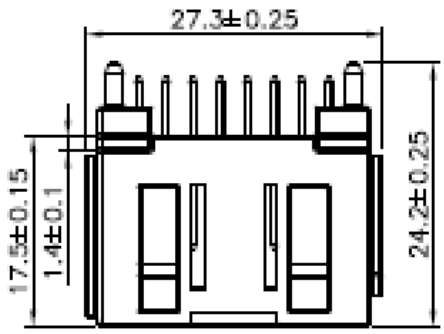

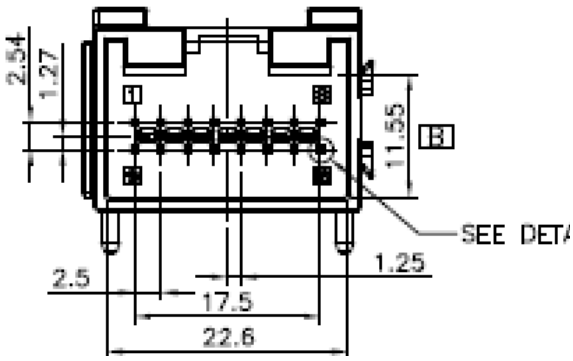

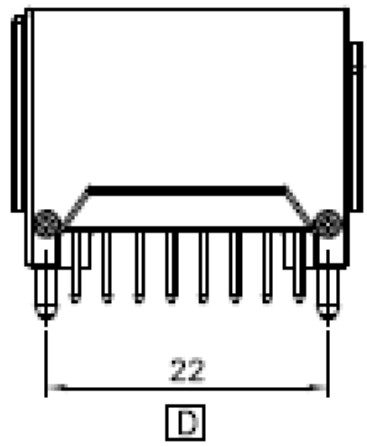

Ordering Information

A25002S-16X-XX-X
1 2 3 4 5 6

1: —— Series No.
2: —— S:Straight Type
3: —— No.of Positions
4: —— S:Matte Tin Plated
Q:Tin Plated
5: —— 01:Coding A-D Black
02:Coding B-C Brown
03:Coding B-D Blue
04:Coding A-C Green
6: —— B:In Tube
C:In Tray
G:Tape&Reel

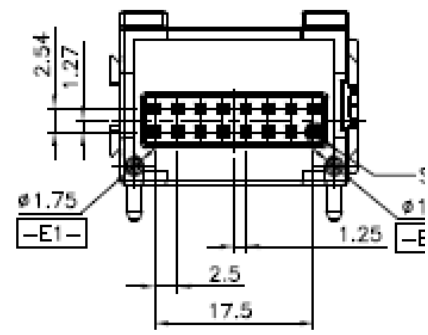

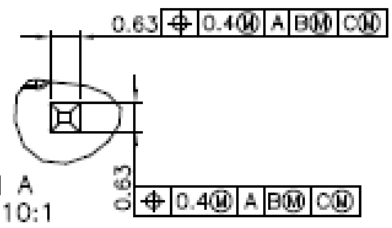

Detail A
Scale 10:1
16 Places

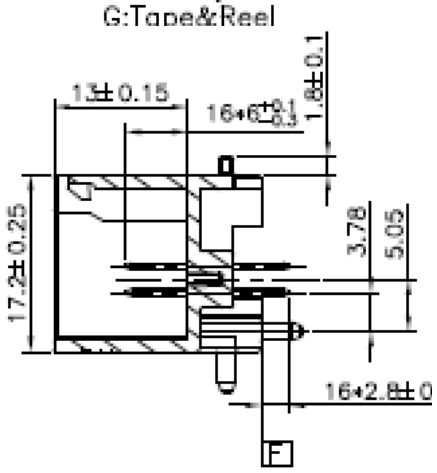

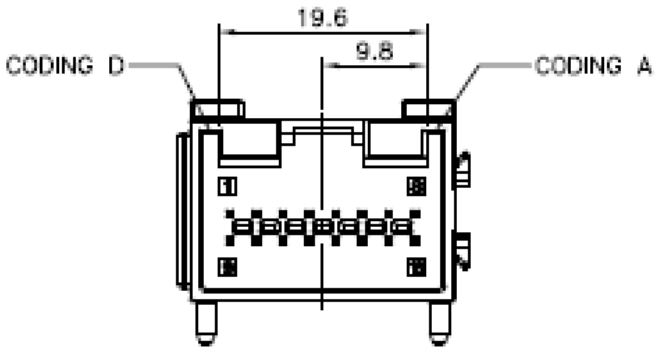

CODING A-D

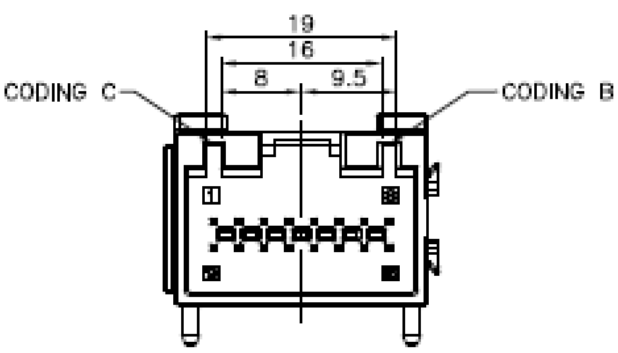

CODING B-C

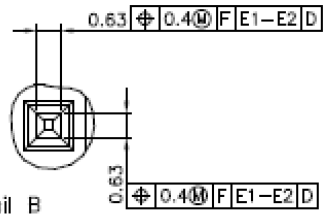

Detail B
Scale 10:1
16 Places

东莞市华晶电子有限公司
http: //www.hjbright.com

.098"(2.50mm)Female Header



Specifications:
Material And Finish:
Insulator:PA10T/SPS UL94V-0
Color:See Ordering Information
Contact:CuZn30
Plated:See Ordering Information

Rating:
Current Rating:7.5A
Voltage Rating:250V
Temperature Rating:-40°C~105°C

Electrical:
Contact resistance:20m Ohm Max
Insulator resistance:100M Ohm m
Dielectric strength:1000V DC/Minu

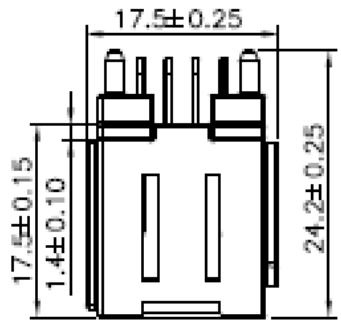

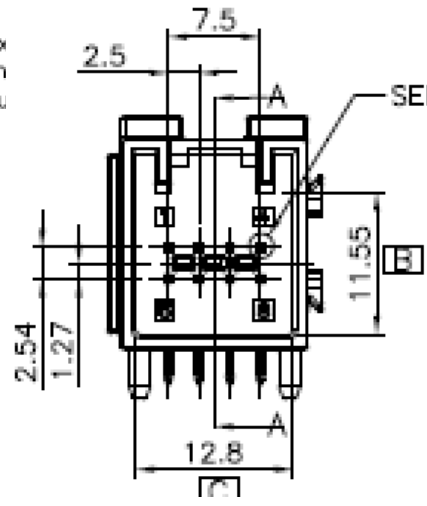

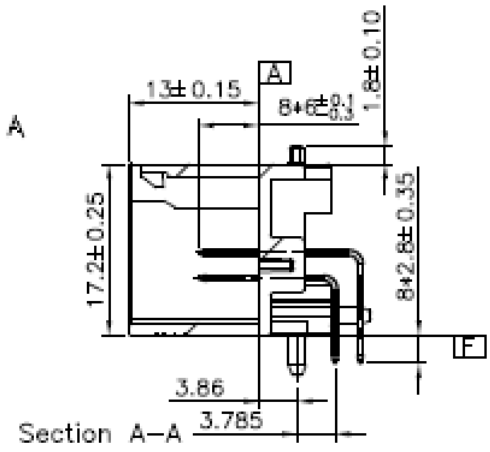

Ordering Information
A25002R-08X-XX-X
1 2 3 4 5 6

1: Series No.
2: R:R/A Type
3: No.of Positions
4: S:Matte Tin Plated
Q:Tin Plated
5: 01:Coding A-D Black
02:Coding B-C Brown
03:Coding B-D Blue
04:Coding A-C Green
6: B:In Tube
C:In Tray
G:Tape&Reel

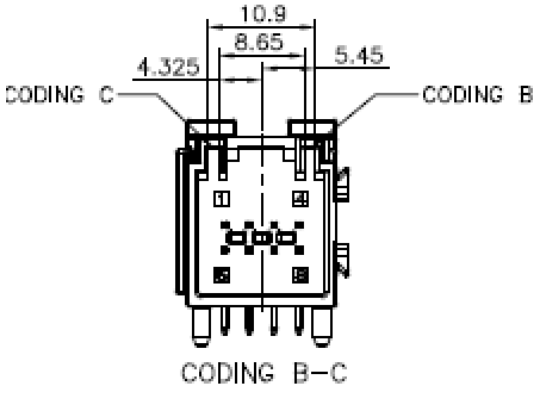

CODING B-C

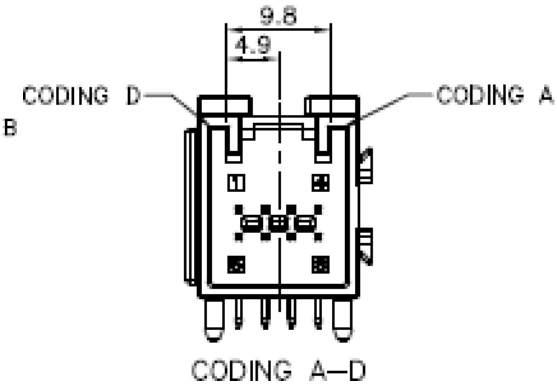

CODING A-D

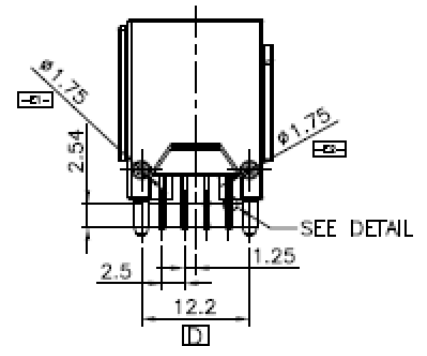

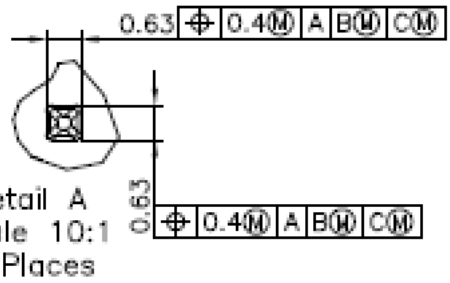

Detail A
Scale 10:1
8 Places

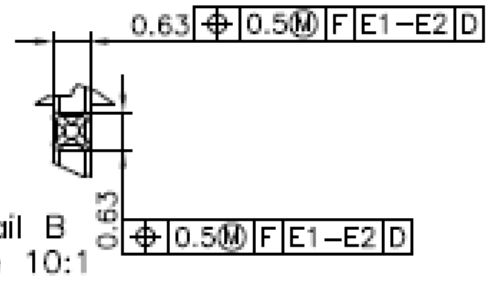

Detail B
Scale 10:1
8 Places

.098"(2.50mm)Female Header



Specifications:
Material And Finish:
Insulator:PA9T UL94V-0
Contact:Brass
Plated:See Ordering Information

Rating:
Current Rating:
Signal Pin:5.0 Amp
Power Pin:16.0 Amp
Operating Temperature Range:-40°~+105°C

Electrical:
Contact resistance:
Signal pin:20m Ohm Max
Power pin:5m Ohm Max
Insulator resistance:100M ohm min.

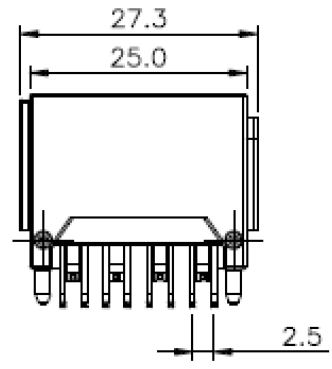

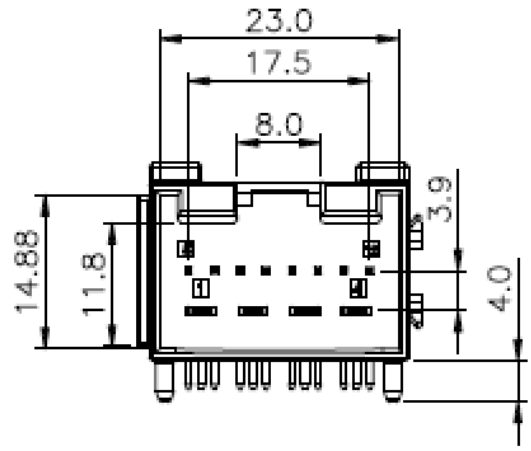

Ordering Information

A25002RA-12Q-XX-XG
1 2 3 4 5 6 7

1:—— Series No.
2:—— R:R/A Type
3:—— No. of Positions
4:—— Q:Tin Plated
5:—— 01:CODING A-C
02:CODING A-D
03:CODING B-C
04:CODING B-D
6:—— A:4 Way
B:10 Way
C:12 Way
7:—— A:In Bag
B:In Tube
C:In Tray
G:Tape&Reel

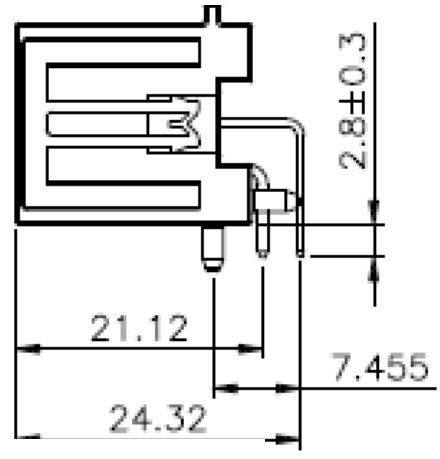

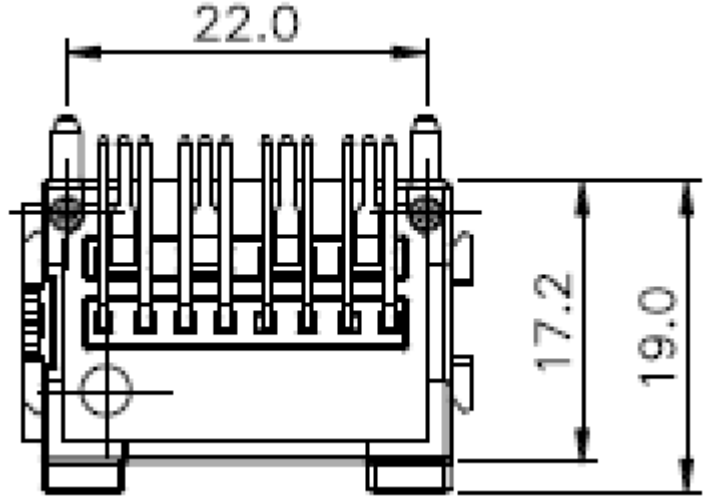

东莞市华晶电子有限公司
http: //www.hjbright.com

.098"(2.50mm)Female Header



Specifications:
Material And Finish:
Insulator:PA10T/SPS UL94V-0
Color:See Ordering Information
Contact:CuZn30
Plated:See Ordering Information

Rating:
Current Rating:7.5A
Voltage Rating:250V
Temperature Rating:-40℃~105℃

Electrical:
Contact resistance:20m Ohm Max
Insulator resistance:100M Ohm min
Dielectric strength:1000V DC/Minute

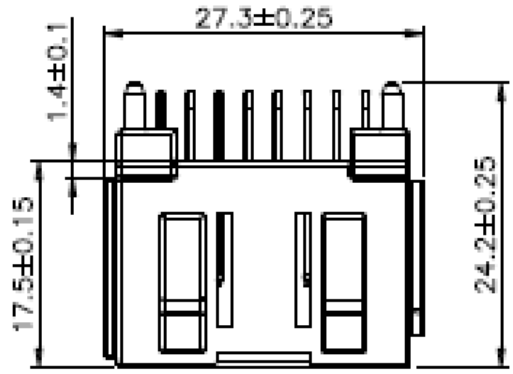

Ordering Information

A25002R-16X-XX-X
1 2 3 4 5 6

1: —— Series No.
2: —— R:R/A Type
3: —— No.of Positions
4: —— S:Matte Tin Plated
Q:Tin Plated
5: —— 01:Coding A-D Blac
02:Coding B-C Brown
03:Coding B-D Blue
04:Coding A-C Green
6: —— B:In Tube
C:In Tray
G:Tape&Reel

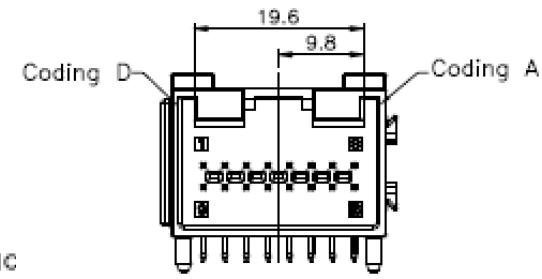

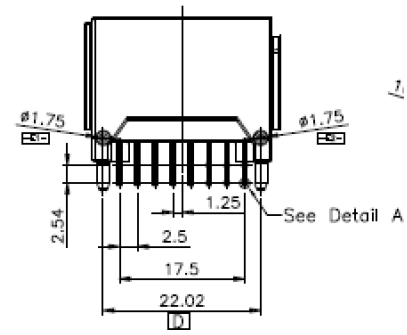

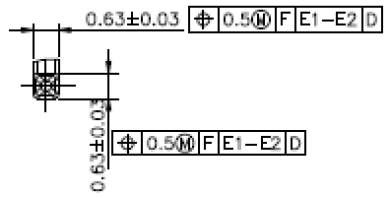

Detail B
Scale 10:1
16 Places

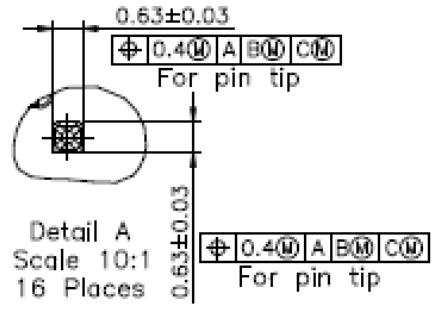

Detail A
Scale 10:1
16 Places

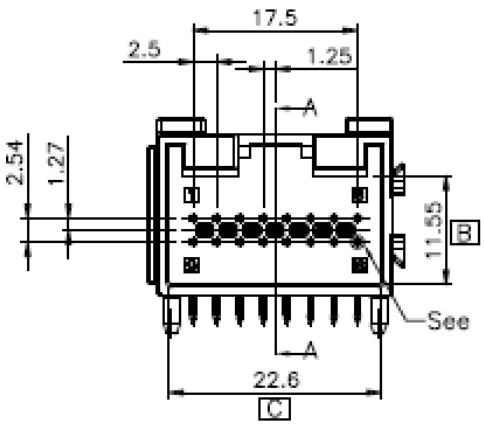

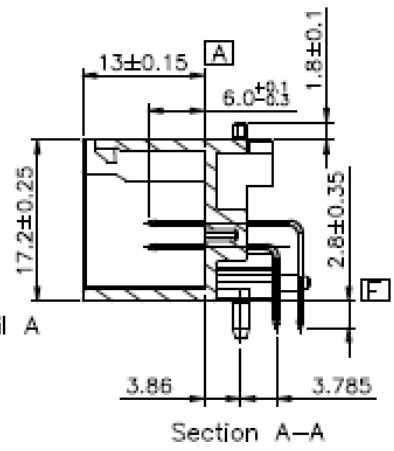

Section A-A

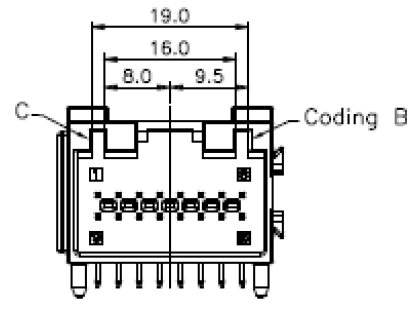

Coding B-C