HJBRIGHT®

.149”(3.80mm)Pitch/Disconnectable InsulationDisplacementConnectors

.149”(3.80mm) Pitch Wafer/Housing

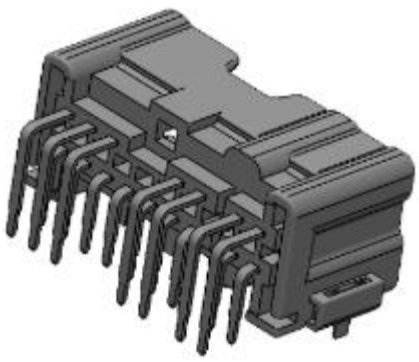

东莞市华晶电子有限公司
http: //www.hjbright.com

.118”(3.00mm) Pitch Wafer/Housing

HJBRIGHT®

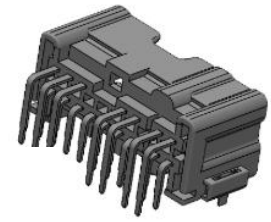

Specifications:
Material And Finish:
Insulator: PA9T Color:Natural
Contact:Brass
Plated:See Ordering Information

Rating:
Current Rating:8A
Operating Temperature Range:-40°~+125°C

Electrical:
Contact resistance:20M Ohm Max
Insulator resistance:1000M ohm Min.
Withstanding Voltage:1000V AC/Minute

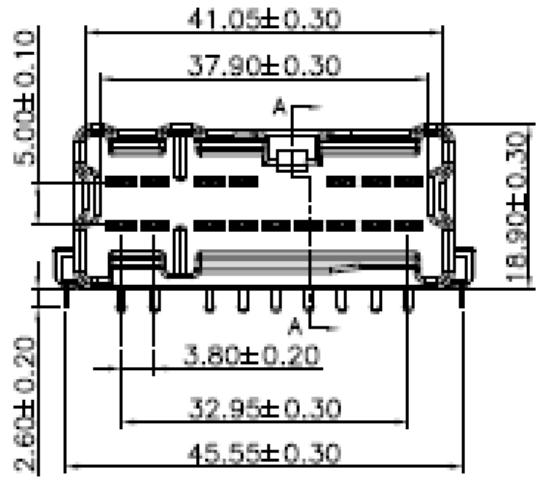

Ordering Information

A38050R-16X-01-C
1 2 3 4 5

1:——Series No.
2:——R:R/A Type
3:——No. of Positions
4:——Q:Tin Plated
S:Matte Tin Plated
5:——C:In Tray

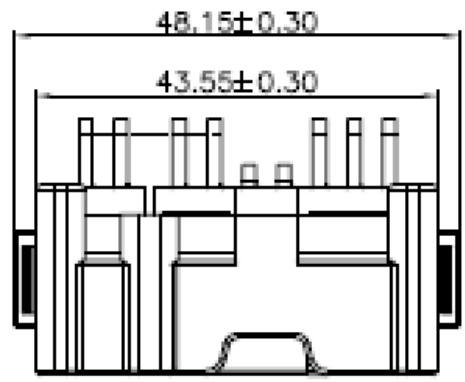

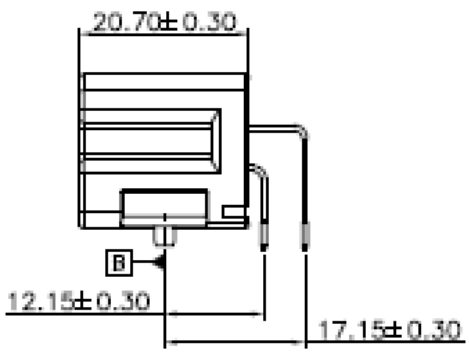

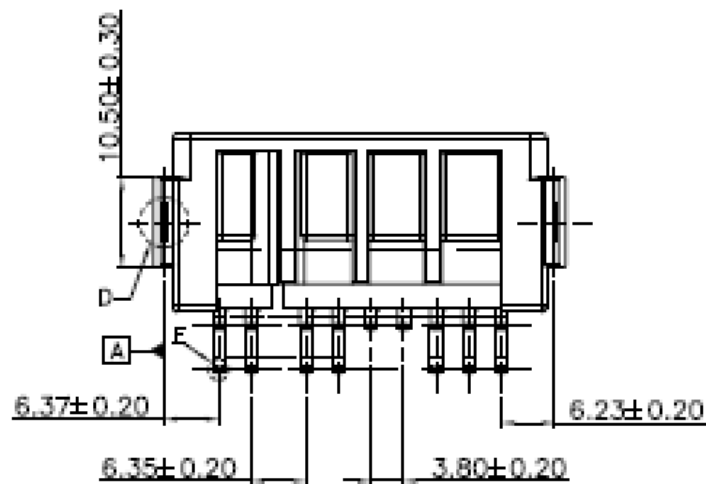

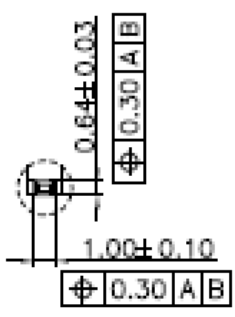

DETAIL E
SCALE 4:1

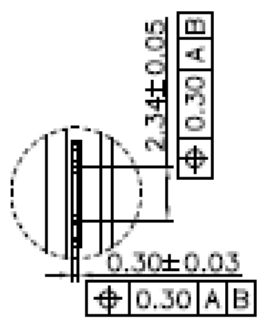

DETAIL D
SCALE 4:1

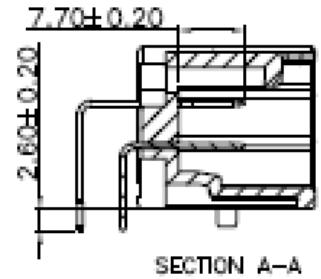

SECTION A-A

东莞市华晶电子有限公司
http: //www.hjbright.com